Quality in motion

Product Catalogue

Hillaldam
SLIDING DOOR SYSTEMS

55 YEARS
1958-2013

TÜVRheinland CERTIFIED
ISO 9001:2008 Management System
www.tuv.com
ID 9105065317

Contact us at:

JOHANNESBURG
P O Box 4664, Johannesburg 2000
28 Bessemer Road, Heriotdale, 2094
Tel: (+2711) 626 1001
Fax: (+2711) 626 1341/2
Email: info@hillaldam.com

CAPE TOWN
P O Box 45614, Ottery 7808
Unit A1, Hyde Park, Ottery Road, Ottery, Cape Town, 7800
Tel: (+2721) 703 9310
Fax: (+2721) 703 9312
Email: capetown@hillaldam.com

DURBAN
P O Box 2681, Durban 4000
Unit 4C, Motown Centre, 190 Old Fort Road, Durban
Tel: (+2731) 301 2681
Fax: (+2731) 305 1746
Email: durban@hillaldam.co.za

PORT ELIZABETH
P O Box 12096, Moffat Place 6006
Tel: (+2741) 585 1781/2
Fax: (+2741) 585 2586
Email: portelizabeth@hillaldam.com

GEORGE
P O Box 4943, George East 6539
Tel: (+2744) 874 1586
Fax: (+2744) 874 3043
Email: george@hillaldam.com

VISIT US ON:

www.hillaldam.com
www.hillaldam.co.za

FOR QUICK AND EASY SPECIFICATIONS,

CONTACT:

Hillaldam FAX-A-SPEC on any of the Fax Numbers
or Hillaldam E_SPEC on info@hillaldam.co.za

Hillaldam
SLIDING DOOR SYSTEMS

Catalogue Index

		PAGE
Selector Guide -	Domestic doors	A-B
Selector Guide -	Commercial doors	C-D
Selector Guide -	Industrial doors	E
Selector Guide -	Shopfitting	F
Selector Guide -	Hospital doors	G-H
Selector Guide -	Hotel doors	I-J
Typical sliding door layouts		K-M

STRAIGHT SLIDING DOOR SYSTEMS									
DOMESTIC AND COMMERCIAL		DOM	COM	IND	S/FIT	HOS	HOT	W/R	PAGE
Cosy Deluxe	T	DOM							ST 1.0
Panther	T	DOM	COM		S/FIT				ST 2.0
Jason	B	DOM	COM		S/FIT	HOS	HOT		ST 3.0
Hatch	B	DOM	COM		S/FIT	HOS	HOT		ST 4.0
Double 60	T	DOM							ST 5.0
Hotel 100	T	DOM	COM			HOS	HOT		ST 6.0
Straightaway 100S	T	DOM	COM	IND					ST 7.0
Domestic 100T	T	DOM	COM		S/FIT	HOS	HOT		ST 8.0
Straightaway 100T Cavity	T	DOM	COM		S/FIT	HOS	HOT		ST 9.0
Straightaway 100A	T	DOM	COM		S/FIT	HOS	HOT		ST 10.0
Straightaway 200A	T	DOM	COM		S/FIT	HOS	HOT		ST 13.0
Straightaway 200A/GL	T	DOM	COM		S/FIT	HOS	HOT		ST 14.0
Straightaway 400A	T	DOM	COM		S/FIT	HOS	HOT		ST 17.0
Straightaway 400A Cavity	T	DOM	COM		S/FIT	HOS	HOT		ST 18.0
Straightaway 400A/GL	T	DOM	COM		S/FIT	HOS	HOT		ST 19.0
Straightaway 600A	T		COM		S/FIT	HOS	HOT		ST 20.0
Quick Cavity	T	DOM							ST 22.0
G-Tech sliding glass	T	DOM	COM		S/FIT	HOS	HOT		ST 23.1
Rollaway 55	B	DOM				HOS	HOT		ST 26.0
Rollaway 100T	B	DOM	COM		S/FIT	HOS	HOT	W/R	ST 27.0
Rollaway 100A	B	DOM	COM		S/FIT	HOS	HOT	W/R	ST 28.0
Rollaway 160	B	DOM	COM		S/FIT	HOS	HOT	W/R	ST 29.0
Rollaway 250B	B	DOM	COM		S/FIT	HOS	HOT	W/R	ST 31.0
Rollaway 250N	B	DOM	COM		S/FIT	HOS	HOT	W/R	ST 32.0
Rollaway 400	B	DOM	COM	IND	S/FIT	HOS	HOT	W/R	ST 33.0

STRAIGHT SLIDING DOOR SYSTEMS									
INDUSTRIAL		DOM	COM	IND	S/FIT	HOS	HOT	W/R	PAGE
Straightaway 200S	T			IND					ST 11.0
Straightaway 200T	T			IND					ST 12.0
Straightaway 400/600S	T			IND					ST 15.0
Straightaway 400/600T	T			IND					ST 16.0
Straightaway 1000S	T			IND					ST 21.0
Strap 150	T	DOM		IND					ST 24.0
Strap 500	T			IND					ST 25.0
Rollaway 250S	B			IND					ST 30.0
Rollaway 500	B			IND					ST 34.0
Rollaway 1000	B			IND					ST 35.0
Rollaway 2000	B			IND					ST 36.0
Rollaway 4000	B			IND					ST 37.0
SLIDING / FOLDING DOOR SYSTEMS									
Foldaside 40	B	DOM	COM			HOS	HOT		SF 1.1
Foldaside 60	B	DOM	COM		S/FIT	HOS	HOT		SF 2.1
Foldaside 60GL	B	DOM	COM		S/FIT	HOS	HOT		SF 3.1
Foldaside 90	T		COM		S/FIT				SF 4.1
Foldaside 90GL	T		COM		S/FIT				SF 5.1
Partitionfold 100	T		COM		S/FIT	HOS	HOT		SF 6.1
Partitionfold 150	T		COM		S/FIT	HOS	HOT		SF 7.1
Centafold 50	T	DOM	COM			HOS	HOT		SF 8.1
Centafold 100	T	DOM	COM		S/FIT	HOS	HOT		SF 9.1
Centafold 150	T		COM		S/FIT	HOS	HOT		SF 10.1
Vistafold 70A	B	DOM	COM		S/FIT	HOS	HOT	W/P	SF 11.1
Vistafold 70T	B	DOM	COM		S/FIT	HOS	HOT	W/R	SF 12.1
Vistafold 30TU	B	DOM			S/FIT			W/R	SF 13.1
Multifold 30E	T	DOM			S/FIT	HOS	HOT		SF 14.1
Multifold 30C	T	DOM			S/FIT	HOS	HOT		SF 15.1
Vistafold Mullion	B	DOM	COM		S/FIT	HOS	HOT	W/R	SF 16.1
SLIDING / STACKING DOOR SYSTEMS									
Stackaway 100	T	DOM	COM		S/FIT				SS 1.1
Stackaway 100GL	T	DOM	COM		S/FIT				SS 2.1
Stackaway 150	T	DOM	COM		S/FIT		HOT		SS 3.1
Stackaway 150GL	T	DOM	COM		S/FIT		HOT		SS 4.1

FITTINGS	PAGE
Steel Top Tracks	F 1.0
Aluminium Top Tracks	F 2.0
Bottom Tracks	F 3.0
Top Guide Channels	F 4.0
Bottom Guide Channels	F 5.0
Track & Channel Brackets	F 6.0
Top Hangers	F 7.0
Bottom Rollers	F 8.0
Guides	F 9.0
Handles 1	F 10.1
Handles 2	F 10.2
Handles 3	F 10.3
Handles 4	F 10.4
Flush Bolts & keeps 1	F 11.1
Flush Bolts & keeps 2	F 11.2
Flush Bolts & keeps 3	F 11.3
Flush Bolts & keeps 4	F 11.4
Door Stops 1	F 12.1
Door Stops 2	F 12.2
Locking	F 13.0
Weather Seals	F 14.0
SPECIAL TRACK SYSTEMS	
GLASS HARDWARE	

KEY		
T	=	TOP HUNG
B	=	BOTTOM ROLLING
DOM	=	DOMESTIC
COM	=	COMMERCIAL
IND	=	INDUSTRIAL
S/FIT	=	SHOP FITTING
HOS	=	HOSPITALS
HOT	=	HOTELS
W/R	=	WEATHER RESISTANT
W/P	=	TESTED WEATHERPROOF

SELECT YOUR SLIDING DOOR SOLUTION

DOMESTIC DOORS

INTERIOR

room doors, cupboards, partitions, interior shutters

LOCATION?	WEATHER?	WHERE?	DOORS?	OPERATION?	SUPPORT?	WEIGHT?	MATERIAL?	LEAF HEIGHT?	LEAF WIDTH?	SOLUTION?	PAGE
INTERIOR	non weatherproof	room door	single leaf	single leaf sliding	top support	max 30kg	timber / aluminium	max 2100mm	max 900mm	Cosy Delux	ST 1.0
						max 90kg	timber / aluminium	max 2100mm	max 1500mm	Panther	ST 2.0
						max 100kg	timber / aluminium	max 2500mm	max 1000mm	Domestic 100T / 100A	ST 8.0/10.0
							glass	max 2500mm	max 1200mm	G-Tech	ST 23.1
						max 150kg	timber / steel	max 2400mm	max 1200mm	Strap 150	ST 24.0
						max 200kg	timber / aluminium	max 2500mm	max 1500mm	Straightaway 200A	ST 13.0
							glass	max 2500mm	max 1500mm	Straightaway 200A/GL	ST 14.0
						max 400kg	timber / aluminium	max 3000mm	max 2000mm	Straightaway 400A	ST 17.0
							glass	max 3000mm	max 1500mm	Straightaway 400A/GL	ST 19.0
					no top support	max 55kg	timber / aluminium	max 2100mm	max 1000mm	Rollaway 55	ST 26.0
				into cavity wall	top support	max 100kg	timber / aluminium	max 2500mm	max 1000mm	Straightaway 100T Cavity	ST 9.0
					top support	max 110kg	timber / aluminium	max 2030mm	max 914mm	Quick Cavity	ST 22.0
					top support	max 400kg	timber / aluminium	max 3000mm	max 2000mm	Straightaway 400A Cavity	ST 18.0
			double leaf	2-leaf biparting	top support	max 30kg	timber / aluminium	max 2100mm	max 1000mm	Cosy	ST 1.0
						max 90kg	timber / aluminium	max 2100mm	max 1500mm	Panther	ST 2.0
						max 100kg	timber / aluminium	max 2500mm	max 1000mm	Domestic 100T / 100A	ST 8.0/10.0
						max 150kg	timber / steel	max 2400mm	max 1200mm	Strap 150	ST 24.0
						max 200kg	timber / aluminium	max 2500mm	max 1500mm	Straightaway 200A	ST 13.0
						max 400kg	timber / aluminium	max 3000mm	max 2000mm	Straightaway 400A	ST 17.0
					no top support	max 55kg	timber / aluminium	max 2100mm	max 1000mm	Rollaway 55	ST 26.0
				into cavity wall	top support	max 100kg	timber / aluminium	max 2500mm	max 1000mm	Strightaway 100T Cavity	ST 9.0
						max 400kg	timber / aluminium	max 2400mm	max 1000mm	Straightaway 400A Cavity	ST 18.0
			multi leaf	sliding & folding	top support	max 30kg	timber / aluminium	max 2400mm	max 600mm	Multifold 30E	SF 14.0
						max 30kg	timber / aluminium	max 2400mm	max 900mm	Multifold 30C	SF 15.1
						max 40kg	timber / aluminium	max 2400mm	max 900mm	Foldaside 40	SF 1.1
						max 50kg	timber / aluminium	max 2400mm	max 1000mm	Centafold 50	SF 8.1
						max 60kg	timber / aluminium	max 2700mm	max 900mm	Foldaside 60	SF 2.1
						max 60kg	glass	max 2400mm	max 800mm	Foldaside 60GL	SF 3.1
						max 100kg	timber / aluminium	max 2700mm	max 1200mm	Centafold 100	SF 9.1
		cupboard	multi leaf	2-leaf bipassing	top support	max 30kg	timber	max 2100mm	max 900mm	Double 60	ST 5.0
				3-leaf bipassing							
						max 45kg	timber	max 2100mm	max 900mm	Hotel 100	ST 6.0
		cabinet	multi leaf	2-leaf bipassing	no top support	max 20kg	timber	max 1000mm	max 900mm	Jason	ST 3.0
				3-leaf bipassing							
		hatch	multi leaf	2-leaf bipassing	no top support	max 20kg	timber	max 1000mm	max 1000mm	Hatch	ST 4.0

SELECT YOUR SLIDING DOOR SOLUTION

DOMESTIC DOORS

EXTERIOR | patio doors, windows, exterior shutters

LOCATION?	WEATHER?	WHERE?	DOORS?	OPERATION?	SUPPORT?	WEIGHT?	MATERIAL?	LEAF HEIGHT?	LEAF WIDTH?	SOLUTION?	PAGE
EXTERIOR	weatherproof	room door	single	single leaf sliding	no top support	max 55kg	timber / aluminium	max 2100mm	max 1000mm	Rollaway 55	ST 26.0
		to exterior				max 100kg	timber	max 2100mm	max 1500mm	Rollaway 100T	ST 27.0
							aluminium	max 2100mm	max 1500mm	Rollaway 100A	ST 28.0
						max 160kg	timber / aluminium	max 2400mm	max 1500mm	Rollaway 160	ST 29.0
						max 250kg	timber / aluminium	max 2700mm	max 1500mm	Rollaway 250B	ST 31.0
						max 400kg	timber / aluminium	max 3500mm	max 2000mm	Rollaway 400	ST 33.0
			double	2-leaf biparting	no top support	max 55kg	timber / aluminium	max 2100mm	max 1000mm	Rollaway 55	ST 26.0
						max 100kg	timber / aluminium	max 2100mm	max 1500mm	Rollaway 100T	ST 27.0
						max 160kg	timber / aluminium	max 2400mm	max 1500mm	Rollaway 160	ST 29.0
						max 250kg	timber / aluminium	max 2700mm	max 1500mm	Rollaway 250B	ST 31.0
						max 400kg	timber / aluminium	max 3500mm	max 2000mm	Rollaway 400	ST 33.0
			multileaf	sliding and folding	no top support	max 70kg	aluminium	max 2700mm	max 900mm	Vistafold 70A	SF 11.1
							timber	max 2700mm	max 900mm	Vistafold 70T	SF 12.1
						max 90kg	aluminium	max 3500mm	max 900mm	Vistafold Mullion	SF 16.1
		window	single leaf	single leaf sliding	no top support	max 55kg	timber / aluminium	max 2100mm	max 1000mm	Rollaway 55	ST 26.0
						max 100kg	timber / aluminium	max 2100mm	max 1500mm	Rollaway 100T	ST 27.0
							aluminium	max 2100mm	max 1500mm	Rollaway 100A	ST 28.0
			double leaf	2-leaf biparting	no top support	ma x 55kg	timber / aluminium	max 2100mm	max 1000mm	Rollaway 55	ST 26.0
						max 100kg	timber / aluminium	max 2100mm	max 1500mm	Rollaway 100T	ST 27.0
							aluminium	max 2100mm	max 1500mm	Rollaway 100A	ST 28.0
			multileaf	sliding & folding	no top support	max 30kg	timber	max 1500mm	max 600mm	Vistafold 30TU	SF 13.1
						max 70kg	aluminium	max 2700mm	max 900mm	Vistafold 70A	SF 11.1
	non weatherproof	doors to exterior	multi leaf	sliding & stacking	top support	max 100kg	timber / aluminium	max 2400mm	max 1000mm	Stackaway 100	SS 1.1
							glass	max 2400mm	max 1000mm	Stackaway 100GL	SS 2.1
						max 150kg	timber / aluminium	max 3500mm	max 1200mm	Stackaway 150	SS 3.1
							glass	max 3500mm	max 1200mm	Stackaway 150GL	SS 4.1
		shutters	single	single leaf shutter	top support	max 100kg	timber / aluminium	max 2500mm	max 1000mm	Domestic 100T / 100A	ST 8.0/10.0
			double	2-leaf shutter b/passing	top support	max 100kg	timber / aluminium	max 2500mm	max 1000mm	Domestic 100T	ST 8.0
			multileaf	sliding & folding	top support	max 30kg	timber / aluminium	max 2400mm	max 600mm	Multifold 30E	SF 14.1
						max 40kg	timber / aluminium	max 2400mm	max 900mm	Foldaside 40	SF 1.1
						max 60kg	timber / aluminium	max 2700mm	max 900mm	Foldaside 60	SF 2.1
		security gate	multi leaf	single leaf sliding	top support	max 100kg	steel	max 2500mm	max 1000mm	Straightaway 100S	ST 7.0
				2-leaf shutter b/passing							
				2-leaf bipassing							

SELECT YOUR SLIDING DOOR SOLUTION

COMMERCIAL DOORS

INTERIOR

doors & moveable partitions in offices, halls

LOCATION?	WEATHER?	WHERE?	DOORS?	OPERATION?	SUPPORT?	WEIGHT?	MATERIAL?	LEAF HEIGHT?	LEAF WIDTH?	SOLUTION?	PAGE
INTERIOR	non weatherproof	cabinet	multileaf	2-leaf bipassing	no top support	max 20kg	timber	max 1000mm	max 900mm	Jason	ST 3.0
				3-leaf bipassing							
				2-leaf bipassing	no top support	max 20kg	glass	max 1000mm	max 1000mm	Hatch	ST 4.0
		cupboard	multileaf	2-leaf bipassing	top support	max 45kg	timber	max 2100mm	max 900mm	Hotel 100	ST 6.0
				3-leaf bipassing							
		room door	single	single leaf sliding	top support	max 90kg	timber / aluminium	max 2100mm	max 1500mm	Panther	ST 2.0
						max 100kg	timber	max 2500mm	max 1000mm	Domestic 100T / 100A	ST 8.0/10.0
							glass	max 2500mm	max 1200mm	G-Tech	ST 23.1
						max 200kg	timber / aluminium	max 2500mm	max 1500mm	Straightaway 200A	ST 13.0
							glass	max 2500mm	max 1500mm	Straightaway 200A/GL	ST 14.0
						max 400kg	timber / aluminium	max 3000mm	max 2000mm	Straightaway 400A	ST 17.0
							glass	max 3000mm	max 1500mm	Straightaway 400A/GL	ST 19.0
						max 600kg	timber / aluminium	max 4000mm	max 3000mm	Straightaway 600A	ST 20.0
			double	2-leaf biparting	top support	max 90kg	timber / aluminium	max 2100mm	max 1500mm	Panther	ST 2.0
						max 100kg	timber	max 2500mm	max 1000mm	Domestic 100T / 100A	ST 8.0/10.0
						max 200kg	timber / aluminium	max 2500mm	max 1500mm	Straightaway 200A	ST 13.0
							glass	max 2500mm	max 1500mm	Straightaway 200A/GL	ST 14.0
						max 400kg	timber / aluminium	max 3000mm	max 2000mm	Straightaway 400A	ST 17.0
							glass	max 3000mm	max 1500mm	Straightaway 400A/GL	ST 19.0
		partitions	multileaf	sliding & folding	top support	max 40kg	timber / aluminium	max 2400mm	max 900mm	Foldaside 40	SF 1.1
						max 50kg	timber / aluminium	max 2400mm	max 1000mm	Centafold 50	SF 8.1
						max 60kg	timber / aluminium	max 2700mm	max 900mm	Foldaside 60	SF 2.1
						max 60kg	glass	max 2400mm	max 800mm	Foldaside 60	SF 3.1
						max 90kg	timber / aluminium	max 3500mm	max 900mm	Foldaside 90	SF 4.1
						max 90kg	glass	max 2700mm	max 900mm	Foldaside 90GL	SF 5.1
						max 100kg	timber / aluminium	max 2700mm	max 1200mm	Centafold 100	SF 9.1
						max 100kg	timber / aluminium	max 3000mm	max 1200mm	Partitionfold 100	SF 6.1
						max 150kg	timber / aluminium	max 3500mm	max 1200mm	Partitionfold 150	SF 7.1
						max 150kg	timber / aluminium	max 3500mm	max 1500mm	Centafold 150	SF 10.1
					no top support	max 70kg	aluminium	max 2700mm	max 900mm	Vistafold 70A	SF 11.1
							timber	max 2700mm	max 900mm	Vistafold 70T	SF 12.1
				sliding & stacking	top support	max 100kg	timber / aluminium	max 2400mm	max 1000mm	Stackaway 100	SS 1.1
							glass	max 2400mm	max 1000mm	Stackaway 100GL	SS 2.1
						max 150kg	timber / aluminium	max 3500mm	max 1200mm	Stackaway 150	SS 3.1
							glass	max 3500mm	max 1200mm	Stackaway 150GL	SS 4.1

SELECT YOUR SLIDING DOOR SOLUTION

COMMERCIAL DOORS

EXTERIOR

exterior sliding & folding doors in offices, centres, halls

LOCATION?	WEATHER?	WHERE?	DOORS?	OPERATION?	SUPPORT?	WEIGHT?	MATERIAL?	LEAF HEIGHT?	LEAF WIDTH?	SOLUTION?	PAGE
EXTERIOR	weatherproof	room to exterior	single	single leaf sliding	no top support	max 100kg	timber	max 2100mm	max 1500mm	Rollaway 100T	ST 27.0
							aluminium	max 2100mm	max 1500mm	Rollaway 100A	ST 28.0
						max 160kg	timber / aluminium	max 2400mm	max 1500mm	Rollaway 160	ST 29.0
						max 250kg	timber / aluminium	max 2700mm	max 1500mm	Rollaway 250B	ST 31.0
						max 400kg	timber / aluminium	max 3500mm	max 2000mm	Rollaway 400	ST 33.0
						max 100kg	timber	max 2100mm	max 1500mm	Rollaway 100T	ST 27.0
			double	2-leaf biparting	no top support		aluminium	max 2100mm	max 1500mm	Rollaway 100A	ST 28.0
						max 250kg	timber / aluminium	max 2700mm	max 1500mm	Rollaway 250B	ST 31.0
						max 400kg	timber / aluminium	max 3500mm	max 2000mm	Rollaway 400	ST 33.0
			multileaf	sliding & folding	no top support	max 70kg	aluminium	max 2700mm	max 900mm	Vistafold 70A	SF 11.1
							timber	max 2700mm	max 900mm	Vistafold 70T	SF 12.1
						max 90kg	aluminium	max 3500mm	max 900mm	Vistafold Mullion	SF 16.1
		security gate	multileaf	single leaf sliding	top support	max 100kg	steel	max 2500mm	max 1000mm	Straightaway 100S	ST 7.0
				2-leaf shutter b/parting							
				2-leaf bipassing							
	non weatherproof	door to exterior	multileaf	sliding & folding	top support	max 60kg	timber / aluminium	max 2700mm	max 900mm	Foldaside 60	SF 2.1
						max 60kg	glass	max 2400mm	max 800mm	Foldaside 60GL	SF 3.1
						max 90kg	timber / aluminium	max 3500mm	max 900mm	Foldaside 90	SF 4.1
						max 90kg	glass	max 2700mm	max 900mm	Foldaside 90GL	SF 5.1
						max 100kg	timber / aluminium	max 2700mm	max 1200mm	Centafold 100	SF 9.1
						max 150kg	timber / aluminium	max 3500mm	max 1500mm	Centafold 150	SF 10.1
					no top support	max 70kg	aluminium	max 2700mm	max 900mm	Vistafold 70A	SF 11.1
							timber	max 2700mm	max 900mm	Vistafold 70T	SF 12.1
						max 90kg	aluminium	max 3500mm	max 900mm	Vistafold Mullion	SF 16.1
				sliding & stacking	top support	max 150kg	timber / aluminium	max 3500mm	max 1200mm	Stackaway 150	SS 3.1
							glass	max 3500mm	max 1200mm	Stackaway 150GL	SS 4.1

SELECT YOUR SLIDING DOOR SOLUTION

INDUSTRIAL DOORS

INTERIOR | factories, sheds, aircraft hangers

LOCATION?	WEATHER?	WHERE?	DOORS?	OPERATION?	SUPPORT?	WEIGHT?	MATERIAL?	LEAF HEIGHT?	LEAF WIDTH?	SOLUTION?	PAGE
INTERIOR	non weatherproof	inside building	single	single leaf sliding	top support	max 100kg	steel	max 2500mm	max 1000mm	Straightaway 100S	ST 7.0
						max 200kg	steel	max 3000mm	max 2000mm	Straightaway 200S	ST 11.0
							timber	max 3000mm	max 2000mm	Straightaway 200T	ST 12.0
						max 400kg	steel	max 3500mm	max 2500mm	Straightaway 400S	ST 15.0
							timber	max 3500mm	max 2500mm	Straightaway 400T	ST 16.0
						max 600kg	steel	max 3500mm	max 3000mm	Straightaway 600S	ST 15.0
						max 1000kg	steel	max 5000mm	max 4000mm	Straightaway 1000S	ST 21.0
			double	2-leaf biparting	top support	max 100kg	steel	max 2500mm	max 1000mm	Straightaway 100S	ST 7.0
						max 200kg	steel	max 3000mm	max 2000mm	Straightaway 200S	ST 11.0
							timber	max 3000mm	max 2000mm	Straightaway 200T	ST 12.0
						max 400kg	steel	max 3500mm	max 2500mm	Straightaway 400S	ST 15.0
							timber	max 3500mm	max 2500mm	Straightaway 400T	ST 16.0
						max 600kg	steel	max 3500mm	max 3000mm	Straightaway 600S	ST 15.0
						max 1000kg	steel	max 5000mm	max 4000mm	Straightaway 1000S	ST 21.0
exterior	non weatherproof	outside building	single	single leaf sliding	no top support	max 100kg	steel	max 2500mm	max 1000mm	Straightaway 100S	ST 7.0
		security gates				max 200kg	steel	max 3000mm	max 2000mm	Straightaway 200S	ST 11.0
							timber	max 3000mm	max 2000mm	Straightaway 200T	ST 12.0
						max 400kg	steel	max 3500mm	max 2500mm	Straightaway 400S	ST 15.0
							timber	max 3500mm	max 2500mm	Straightaway 400T	ST 16.0
						max 600kg	steel	max 3500mm	max 3000mm	Straightaway 600S	ST 15.0
						max 1000kg	steel	max 5000mm	max 4000mm	Straightaway 1000S	ST 21.0
					no top support	max 250kg	steel	max 3500mm	max 2000mm	Rollaway 250S	ST 30.0
						max 500kg	steel	max 4000mm	max 3000mm	Rollaway 500	ST 34.0
						max 1000kg	steel	max 5000mm	max 4000mm	Rollaway 1000	ST 35.0
			double	2-leaf biparting	top support	max 100kg	steel	max 2500mm	max 1000mm	Straightaway 100S	ST 7.0
						max 200kg	steel	max 3000mm	max 2000mm	Straightaway 200S	ST 11.0
							timber	max 3000mm	max 2000mm	Straightaway 200T	ST 12.0
						max 400kg	steel	max 3500mm	max 2500mm	Straightaway 400S	ST 15.0
							timber	max 3500mm	max 2500mm	Straightaway 400T	ST 16.0
						max 600kg	steel	max 3500mm	max 3000mm	Straightaway 600S	ST 15.0
						max 1000kg	steel	max 5000mm	max 4000mm	Straightaway 1000S	ST 21.0
					no top support	max 250kg	steel	max 3500mm	max 2000mm	Rollaway 250S	ST 30.0
						max 500kg	steel	max 4000mm	max 3000mm	Rollaway 500	ST 34.0
						max 1000kg	steel	max 5000mm	max 4000mm	Rollaway 1000	ST 35.0
		aircraft hangar	multileaf	leaves bipassing	no top support	max 2000kg	steel	max 6000mm	max 5000mm	Rollaway 2000	ST 36.0
						max 4000kg	steel	max 10000mm	max 6000mm	Rollaway 4000	ST 37.0
		farm shed or	single or	single leaf sliding	top support	max 150kg	timber / steel	max 2400mm	max 1200mm	Strap 150	ST 24.0
		barn door	double leaf	2-leaf biparting		max 250kg	timber / steel	max 2700mm	max 2000mm	Strap 500	ST 25.0

SELECT YOUR SLIDING DOOR SOLUTION

SHOP FITTING

shopfronts, shop interiors, display cabinets

LOCATION?	WEATHER?	WHERE?	DOORS?	OPERATION?	SUPPORT?	WEIGHT?	MATERIAL?	LEAF HEIGHT?	LEAF WIDTH?	SOLUTION?	PAGE
INTERIOR	non weatherproof		single leaf	single leaf sliding	top support	max 90kg	timber / aluminium	max 2100mm	max 1500mm	Panther	ST 2.0
						max 100kg	timber	max 2500mm	max 1000mm	Straightaway 100A	ST 8.0
						max 200kg	timber / aluminium	max 2500mm	max 1500mm	Straightaway 200A	ST 13.0
							glass	max 2500mm	max 1500mm	Straightaway 200A/GL	ST 14.0
						max 400kg	timber / aluminium	max 3000mm	max 2000mm	Straightaway 400A	ST 17.0
							glass	max 3000mm	max 1500mm	Straightaway 400A/GL	ST 19.0
						max 600kg	timber / aluminium	max 4000mm	max 3000mm	Straightaway 600A	ST 20.0
			multileaf	2-leaf bipassing	top support	max 45kg	timber	max 2100mm	max 900mm	Hotel 100	ST 6.0
				3-leaf bipassing							
			multileaf	2-leaf bipassing	no top support	max 20kg	timber	max 1000mm	max 900mm	Jason	ST 3.0
				3-leaf bipassing							
				2-leaf bipassing	no top support	max 20kg	glass	max 1000mm	max 1000mm	Hatch	ST 4.0
EXTERIOR	weatherproof		single leaf	single leaf sliding	no top support	max 100kg	timber	max 2100mm	max 1500mm	Rollaway 100T	ST 27.0
							aluminium	max 2100mm	max 1500mm	Rollaway 100A	ST 28.0
						max 160kg	timber / aluminium	max 2400mm	max 1500mm	Rollaway 160	ST 29.0
						max 250kg	timber	max 2700mm	max 1500mm	Rollaway 250B	ST 31.0
						max 250kg	aluminium	max 3000mm	max 2000mm	Rollaway 250N	ST 32.0
						max 400kg	timber / aluminium	max 3500mm	max 2000mm	Rollaway 400	ST 33.0
			double leaf	2-leaf biparting	no top support	max 100kg	timber / aluminium	max 2100mm	max 1500mm	Rollaway 100T	ST 27.0
							aluminium	max 2100mm	max 1500mm	Rollaway 100A	ST 28.0
						max 160kg	timber / aluminium	max 2400mm	max 1500mm	Rollaway 160	ST 29.0
						max 250kg	timber / aluminium	max 2700mm	max 1500mm	Rollaway 250B	ST 31.0
						max 400kg	timber / aluminium	max 3500mm	max 2000mm	Rollaway 400	ST 33.0
			multileaf	sliding & folding	no top support	max 70kg	aluminium	max 2700mm	max 900mm	Vistafold 70A	SF 11.1
							timber	max 2700mm	max 900mm	Vistafold 70T	SF 12.1
						max 90kg	aluminium	max 3500mm	max 900mm	Vistafold Mullion	SF 16.1
	non weatherproof		multileaf	sliding & folding	top support	max 30kg	timber / aluminium	max 2400mm	max 600mm	Multifold 30E	SF 14.1
						max 30kg	timber / aluminium	max 2400mm	max 800mm	Multifold 30C	SF 15.1
						max 60kg	timber / aluminium	max 2700mm	max 900mm	Foldaside 60	SF 2.1
						max 60kg	glass	max 2400mm	max 800mm	Foldaside 60GL	SF 3.1
						max 90kg	timber / aluminium	max 3500mm	max 900mm	Foldaside 90	SF 4.1
						max 90kg	glass	max 2700mm	max 900mm	Foldaside 90GL	SF 5.1
						max 100kg	timber / aluminium	max 2700mm	max 1200mm	Centafold 100	SF 9.1
						max 100kg	timber / aluminium	max 3000mm	max 1200mm	Partitionfold 100	SF 6.1
						max 150kg	timber / aluminium	max 3500mm	max 1200mm	Partitionfold 150	SF 7.1
						max 150kg	timber / aluminium	max 3500mm	max 1500mm	Centafold 150	SF 10.1
				sliding & stacking	top support	max 150kg	timber / aluminium	max 3500mm	max 1200mm	Stackaway 150	SS 3.1
							glass	max 3500mm	max 1200mm	Stackaway 150GL	SS 4.1

SELECT YOUR SLIDING DOOR SOLUTION

HOSPITAL DOORS

INTERIOR

wards, X-ray room doors, assembly areas

LOCATION?	WEATHER?	WHERE?	DOORS?	OPERATION?	SUPPORT?	WEIGHT?	MATERIAL?	LEAF HEIGHT?	LEAF WIDTH?	SOLUTION?	PAGE
INTERIOR	non weatherproof	room door	single leaf	single leaf sliding	top support	max 100kg	timber / aluminium	max 2500mm	max 1000mm	Domestic 100T / 100A	ST 8.0/10.0
						max 200kg	timber / aluminium	max 2500mm	max 1500mm	Straightaway 200A	ST 13.0
							glass	max 2500mm	max 1500mm	Straightaway 200A/GL	ST 14.0
						max 400kg	timber / aluminium	max 3000mm	max 2000mm	Straightaway 400A	ST 17.0
							glass	max 3000mm	max 1500mm	Straightaway 400A/GL	ST 19.0
						max 600kg	timber / lead	max 4000mm	max 3000mm	Straightaway 600A	ST 20.0
			double leaf	2-leaf biparting	top support	max 100kg	timber / aluminium	max 2500mm	max 1000mm	Domestic 100T / 100A	ST 8.0/10.0
						max 400kg	timber / lead	max 3000mm	max 2000mm	Straightaway 400A	ST 17.0
						max 600kg	timber / lead	max 4000mm	max 3000mm	Straightaway 600A	ST 20.0
		partitions	multileaf	sliding & folding	top support	max 30kg	timber / aluminium	max 2400mm	max 600mm	Multifold 30E	SF 14.1
						max 30kg	timber / aluminium	max 2400mm	max 900mm	Multifold 30C	SF 15.1
						max 40kg	timber / aluminium	max 2400mm	max 900mm	Foldaside 40	SF 1.1
						max 50kg	timber / aluminium	max 2400mm	max 1000mm	Centafold 50	SF 8.1
						max 60kg	timber / aluminium	max 2700mm	max 900mm	Foldaside 60	SF 2.1
						max 60kg	glass	max 2400mm	max 800mm	Foldaside 60GL	SF 3.1
						max 100kg	timber / aluminium	max 2700mm	max 1200mm	Centafold 100	SF 9.1
						max 100kg	timber / aluminium	max 3000mm	max 1200mm	Partitionfold 100	SF 6.1
						max 150kg	timber / aluminium	max 3500mm	max 1200mm	Partitionfold 150	SF 7.1
						max 150kg	timber / aluminium	max 3500mm	max 1500mm	Centafold 150	SF 10.1
					no top support	max 70kg	aluminium	max 2700mm	max 900mm	Vistafold 70A	SF 11.1
							timber	max 2700mm	max 900mm	Vistafold 70T	SF 12.1
						max 90kg	aluminium	max 3500mm	max 900mm	Vistafold Mullion	SF 16.1
		cupboard	multileaf	2 / 3-leaf bipassing	top support	max 45kg	timber	max 2100mm	max 900mm	Hotel 100	ST 6.0
		cabinet	multileaf	2 / 3-leaf bipassing	no top support	max 20kg	timber	max 1000mm	max 900mm	Jason	ST 3.0
				2-leaf bipassing	no top support	max 20kg	glass	max 1000mm	max 1000mm	Hatch	ST 4.0

SELECT YOUR SLIDING DOOR SOLUTION

HOSPITAL DOORS

EXTERIOR

wards, X-ray room doors, assembly areas

LOCATION?	WEATHER?	WHERE?	DOORS?	OPERATION?	SUPPORT?	WEIGHT?	MATERIAL?	LEAF HEIGHT?	LEAF WIDTH?	SOLUTION?	PAGE
EXTERIOR	weatherproof	room door	single leaf	single leaf sliding	no top support	max 55kg	timber / aluminium	max 2100mm	max 1000mm	Rollaway 55	ST 26.0
		to exterior				max 100kg	timber	max 2100mm	max 1500mm	Rollaway 100T	ST 27.0
							aluminium	max 2100mm	max 1500mm	Rollaway 100A	ST 28.0
						max 160kg	timber / aluminium	max 2400mm	max 1500mm	Rollaway 160	ST 29.0
						max 250kg	timber	max 2700mm	max 1500mm	Rollaway 250B	ST 31.0
						max 250kg	aluminium	max 3000mm	max 2000mm	Rollaway 250N	ST 32.0
						max 400kg	timber / aluminium	max 3500mm	max 2000mm	Rollaway 400	ST 33.0
			double leaf	2-leaf biparting	no top support	max 55kg	timber / aluminium	max 2100mm	max 1000mm	Rollaway 55	ST 26.0
						max 100kg	timber	max 2100mm	max 1500mm	Rollaway 100T	ST 27.0
							aluminium	max 2100mm	max 1500mm	Rollaway 100A	ST 28.0
						max 160kg	timber / aluminium	max 2400mm	max 1500mm	Rollaway 160	ST 29.0
						max 250kg	timber	max 2700mm	max 1500mm	Rollaway 250B	ST 31.0
						max 250kg	aluminium	max 3000mm	max 2000mm	Rollaway 250N	ST 32.0
						max 400kg	timber / aluminium	max 3500mm	max 2000mm	Rollaway 400	ST 33.0
			multileaf	sliding & folding	no top support	max 70kg	aluminium	max 2700mm	max 900mm	Vistafold 70A	SF 11.1
							timber	max 2700mm	max 900mm	Vistafold 70T	SF 12.1
		window	single leaf	sliding & folding	no top support	max 55kg	timber / aluminium	max 2100mm	max 1000mm	Rollaway 55	ST 26.0
						max 100kg	timber	max 2100mm	max 1500mm	Rollaway 100T	ST 27.0
							aluminium	max 2100mm	max 1500mm	Rollaway 100A	ST 28.0
			double leaf	2-leaf biparting	no top support	max 55kg	timber / aluminium	max 2100mm	max 1000mm	Rollaway 55	ST 26.0
						max 100kg	timber	max 2100mm	max 1500mm	Rollaway 100T	ST 27.0
							aluminium	max 2100mm	max 1500mm	Rollaway 100A	ST 28.0

SELECT YOUR SLIDING DOOR SOLUTION

HOTEL DOORS

INTERIOR

room doors, cupboards, conference rooms

LOCATION?	WEATHER?	WHERE?	DOORS?	OPERATION?	SUPPORT?	WEIGHT?	MATERIAL?	LEAF HEIGHT?	LEAF WIDTH?	SOLUTION?	PAGE
INTERIOR	non weatherproof	room door	single leaf	single leaf sliding	top support	max 90kg	timber	max 2100mm	max 1500mm	Panther	ST 2.0
						max 100kg	timber / aluminium	max 2500mm	max 1000mm	Domestic 100T / 100A	ST 8.0/10.0
							glass	max 2500mm	max 1200mm	G-Tech	ST 23.1
						max 200kg	timber / aluminium	max 2500mm	max 1500mm	Straightaway 200A	ST 13.0
							glass	max 2500mm	max 1500mm	Straightaway 200A/GL	ST 14.0
						max 400kg	timber / aluminium	max 3000mm	max 2000mm	Straightaway 400A	ST 17.0
							glass	max 3000mm	max 1500mm	Straightaway 400A/GL	ST 19.0
						max 600kg	timber / aluminium	max 4000mm	max 3000mm	Straightaway 600A	ST 20.0
				into cavity wall	top support	max 100kg	timber / aluminium	max 2500mm	max 1000mm	Straightaway 100T Cavity	ST 9.0
					top support	max 400kg	timber / aluminium	max 3000mm	max 2000mm	Straightaway 400A Cavity	ST 18.0
			double leaf	2-leaf biparting	top support	max 90kg	timber / aluminium	max 2100mm	max 1500mm	Panther	ST 2.0
						max 100kg	timber	max 2500mm	max 1000mm	Domestic 100T / 100A	ST 8.0/10.0
						max 200kg	timber / aluminium	max 2500mm	max 1500mm	Straightaway 200A	ST 13.0
							glass	max 2500mm	max 1500mm	Straightaway 200A/GL	ST 14.0
						max 400kg	timber / aluminium	max 3000mm	max 2000mm	Straightaway 400	ST 17.0
							glass	max 3000mm	max 1500mm	Straightaway 400 A/GL	ST 19.0
		partitions	multileaf	sliding & folding	top support	max 30kg	timber / aluminium	max 2400mm	max 600mm	Multifold 30E	SF 14.1
						max 30kg	timber / aluminium	max 2400mm	max 800mm	Multifold 30C	SF 15.1
						max 40kg	timber / aluminium	max 2400mm	max 900mm	Foldaside 40	SF 1.1
						max 50kg	timber / aluminium	max 2400mm	max 1000mm	Centafold 50	SF 8.1
						max 60kg	timber / aluminium	max 2700mm	max 900mm	Foldaside 60	SF 2.1
						max 60kg	glass	max 2400mm	max 800mm	Foldaside 60GL	SF 3.1
						max 100kg	timber / aluminium	max 2700mm	max 1200mm	Centafold 100	SF 9.1
						max 100kg	timber / aluminium	max 3000mm	max 1200mm	Partitionfold 100	SF 6.1
						max 150kg	timber / aluminium	max 3500mm	max 1200mm	Partitionfold 150	SF 7.1
						max 150kg	timber / aluminium	max 3500mm	max 1500mm	Centafold 150	SF 10.1
					no top support	max 70kg	aluminium	max 2700mm	max 900mm	Vistafold 70A	SF 11.1
							timber	max 2700mm	max 900mm	Vistafold 70T	SF 12.1
				sliding & stacking	top support	max 150kg	timber / aluminium	max 3500mm	max 1200mm	Stackaway 150	SS 3.1
							glass	max 3500mm	max 1200mm	Stackaway 150GL	SS 4.1
		cupboard	multileaf	2 / 3-leaf bipassing	top support	max 50kg	timber	max 2100mm	max 900mm	Hotel 100	ST 6.0
		cabinet	multileaf	2 / 3-leaf bipassing	no top support	max 20kg	timber	max 1000mm	max 900mm	Jason	ST 3.0
				2-leaf bipassing	no top support	max 15kg	glass	max 1000mm	max 1000mm	Hatch	ST 4.0

SELECT YOUR SLIDING DOOR SOLUTION

HOTEL DOORS

EXTERIOR | patio doors, windows, restaurants, conference rooms

LOCATION?	WEATHER?	WHERE?	DOORS?	OPERATION?	SUPPORT?	WEIGHT?	MATERIAL?	LEAF HEIGHT?	LEAF WIDTH?	SOLUTION?	PAGE
EXTERIOR	weatherproof	room door	single leaf	single leaf sliding	no top support	max 55kg	timber / aluminium	max 2100mm	max 1000mm	Rollaway 55	ST 26.0
		to exterior				max 100kg	timber	max 2100mm	max 1500mm	Rollaway 100T	ST 27.0
							aluminium	max 2100mm	max 1500mm	Rollaway 100A	ST 28.0
						max 160kg	timber / aluminium	max 2400mm	max 1500mm	Rollaway 160	ST 29.0
						max 250kg	timber	max 2700kg	max 1500mm	Rollaway 250B	ST 31.0
						max 250kg	aluminium	max 3000kg	max 2000mm	Rollaway 250N	ST 32.0
						max 400kg	timber / aluminium	max 3500mm	max 2000mm	Rollaway 400	ST 33.0
			double leaf	2-leaf biparting	no top support	max 55kg	timber / aluminium	max 2100mm	max 1000mm	Rollaway 55	ST 26.0
						max 100kg	timber	max 2100mm	max 1500mm	Rollaway 100T	ST 27.0
							aluminium	max 2100mm	max 1500mm	Rollaway 100A	ST 28.0
						max 160kg	timber / aluminium	max 2400mm	max 1500mm	Rollaway 160	ST 29.0
						max 250kg	timber	max 2700mm	max 1500mm	Rollaway 250B	ST 31.0
						max 250kg	aluminium	max 3000mm	max 2000mm	Rollaway 250N	ST 32.0
						max 400kg	timber / aluminium	max 3500mm	max 2000mm	Rollaway 400	ST 33.0
			multileaf	sliding and folding	no top support	max 70kg	aluminium	max 2700mm	max 900mm	Vistafold 70A	SF 11.1
							timber	max 2700mm	max 900mm	Vistafold 70T	SF 12.1
						max 90kg	aluminium	max 3500mm	max 900mm	Vistafold Mullion	SF 16.1
		window	single leaf	single leaf sliding	no top support	max 55kg	timber / aluminium	max 2100mm	max 1000mm	Rollaway 55	ST 26.0
						max 100kg	timber	max 2100mm	max 1500mm	Rollaway 100T	ST 27.0
							aluminium	max 2100mm	max 1500mm	Rollaway 100A	ST 28.0
			double leaf	2-leaf biparting	no top support	max 55kg	timber / aluminium	max 2100mm	max 1000mm	Rollaway 55	ST 26.0
						max 100kg	timber	max 2100mm	max 1500mm	Rollaway 100T	ST 27.0
							aluminium	max 2100mm	max 1500mm	Rollaway 100A	ST 28.0
			multileaf	sliding & folding	no top support	max 30kg	timber	max 1500mm	max 600mm	Vistafold 30TU	SF 13.1
						max 70kg	aluminium	max 2700mm	max 900mm	Vistafold 70A	SF 11.1
	non weatherproof	doors	multileaf	sliding & stacking	top support	max 150kg	timber / aluminium	max 3500mm	max 1200mm	Stackaway 150	SS 3.1
							glass	max 3500mm	max 1200mm	Stackaway 150GL	SS 4.1

SLIDING TO ONE SIDE

SLIDING TO ONE SIDE INTO A CAVITY WALL

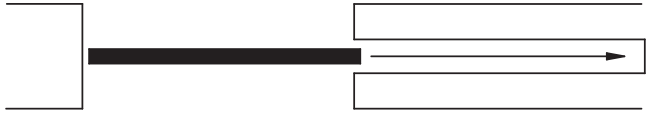

BIPARTING TO EACH SIDE

BIPASSING TO ONE SIDE

BIPASSING TO BOTH SIDES

BIPASSING TO EACH SIDE - 2 DOORS

BIPARTING & BIPASSING TO ONE SIDE - 3 DOORS

Hillaldam
SLIDING DOOR SYSTEMS

South Africa: +27 11 626 1001
www.hillaldam.com

Typical Sliding Door Layouts

Sliding & Folding Doors

SLIDING AND FOLDING TO ONE SIDE - FOLDASIDE (END HUNG)

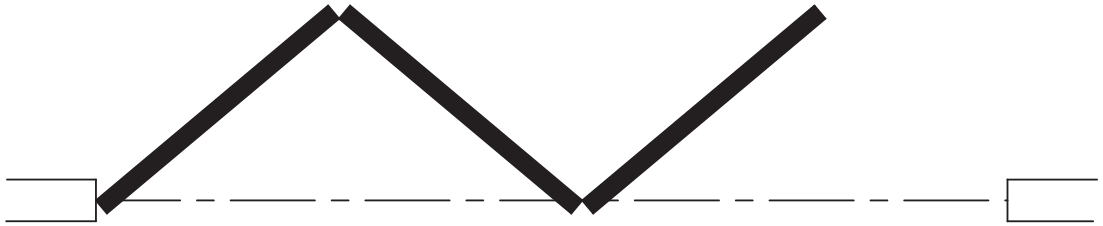

SLIDING AND FOLDING TO ONE SIDE - CENTAFOLD (CENTRE HUNG)

SLIDING AND FOLDING TO ONE SIDE - PARTITIONFOLD
(CENTRE HUNG IN PAIRED PANELS WITH HINGED LEAF)

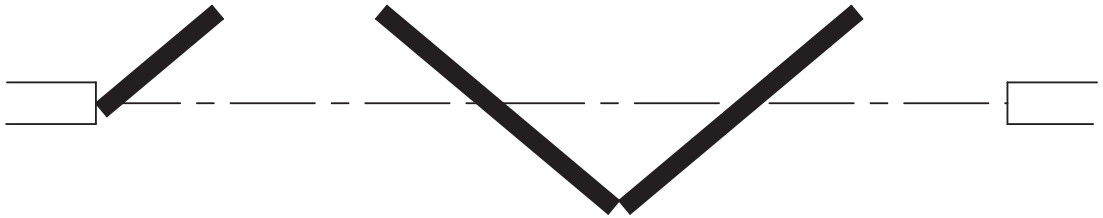

Hillaldam
SLIDING DOOR SYSTEMS

South Africa: +27 11 626 1001
www.hillaldam.com

Typical Sliding Door Layouts

Straight Sliding Doors

ROUND-THE-CORNER SLIDING

SLIDING AROUND A CURVE TO
THE SIDE WALL
- CORNAWAY

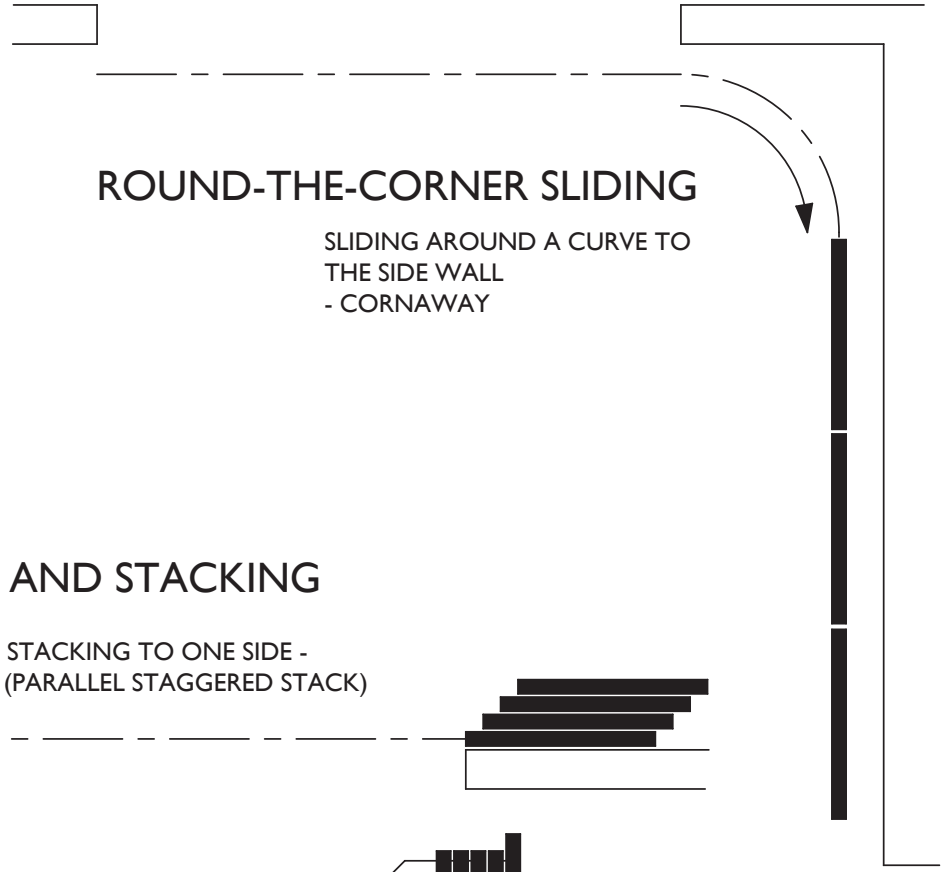

SLIDING AND STACKING

SLIDING AND STACKING TO ONE SIDE -
STACKAWAY (PARALLEL STAGGERED STACK)

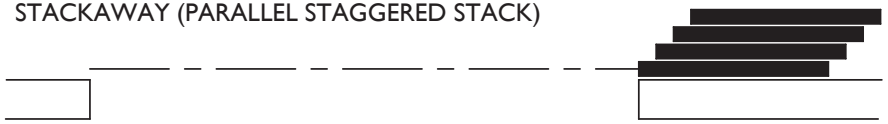

SLIDING AND STACKING TO ONE SIDE -
STACKAWAY (90-DEGREE EVEN STACK)

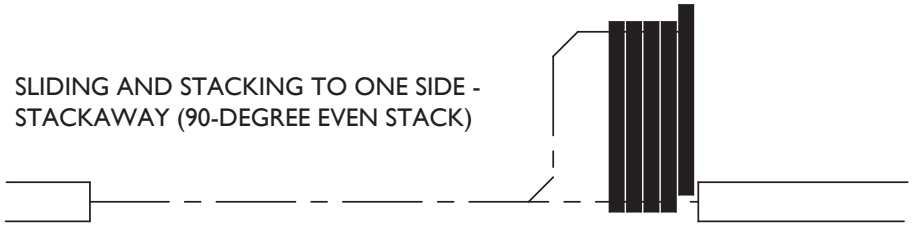

Hillaldam
SLIDING DOOR SYSTEMS
South Africa: +27 11 626 1001
www.hillaldam.com

Straight Sliding Door Systems

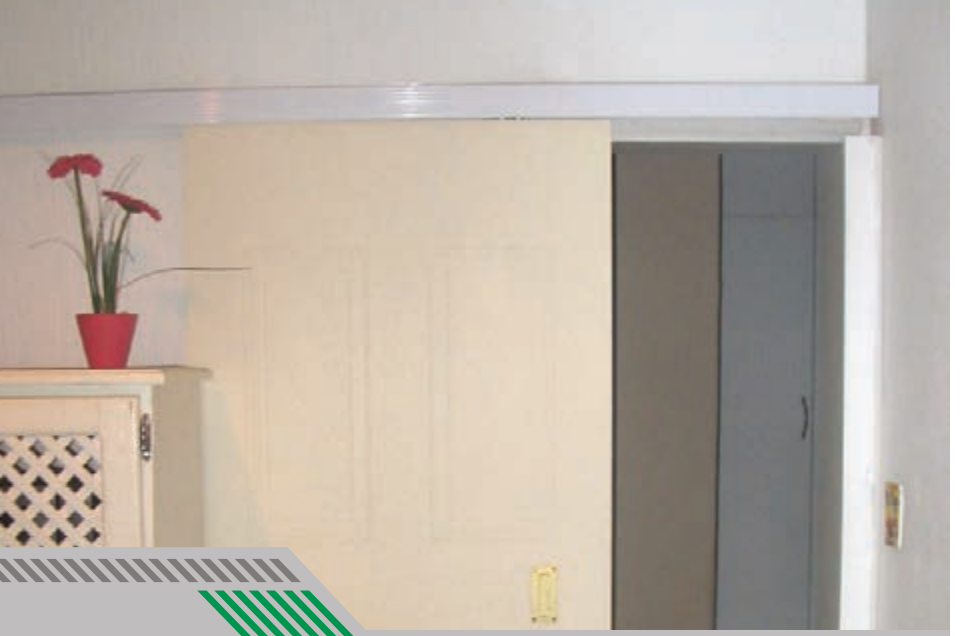

Cosy Deluxe

Sliding door system for interior doors. Ideal for hollow core and semi-solid doors.
The Cosy Deluxe is the popular DIY sliding hardware for doors up to 30kg.

Features

- Easy to fit
- Smooth-running, ball-bearing wheels
- Built-in track stops
- No cutting or grooving of the door required
- Adjustable Cosy guide

Specifications

Max door mass: 30 Kg
Max door width: 900mm
Max door height: 2100mm
Door thickness: 32-44mm

Components

- Cosy aluminium track with stops.
- Cosy hangers
- Cosy Guide
- 96TP Handle
- 100 CP Aluminium pelmet (not included in DIY set)
- 965 Mortice claw lock (not included in DIY set)
- Standard packed set for one door up to 900mm wide

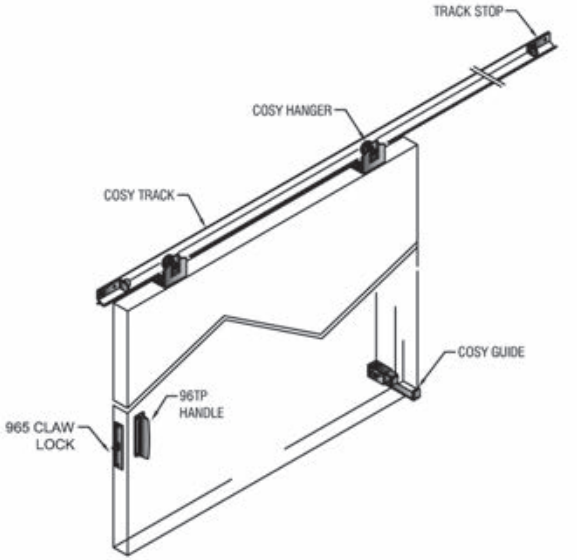

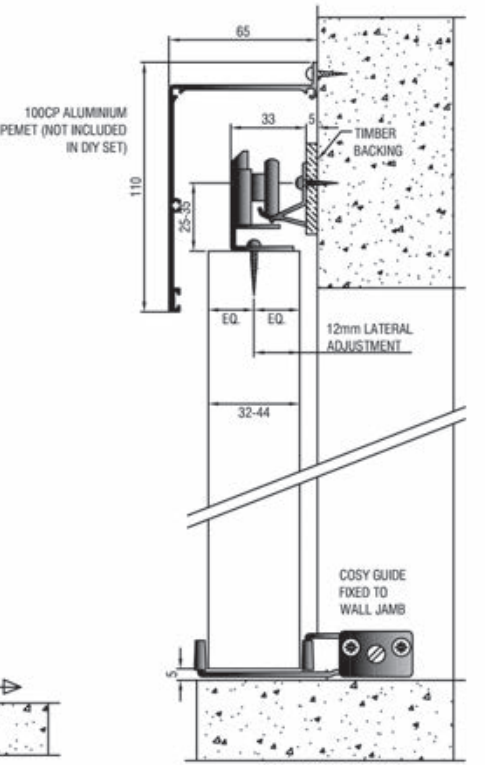

SECTION THROUGH DOOR
SCALE 1:2

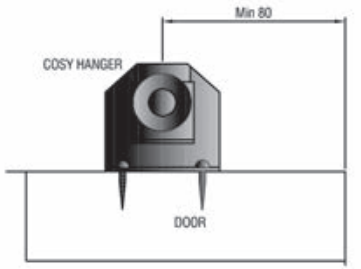

FIT 2 HANGERS PER DOOR

Mechanism

For specialist projects contact:

Hillaldam
SLIDING DOOR SYSTEMS

South Africa: +27 11 626 1001
www.hillaldam.com

Straight sliding door systems
(Domestic, Commercial, Shop fitting, Hospital, Industrial)

Panther

Top hung sliding hardware for interior doors – ideal for semi-solid, solid and glazed doors.

Features

- Heavy duty ball-bearing sliding system
- Concealed guiding
- Lateral & vertical adjustment

Specifications

Max door mass: 90kg
Max door height: 2100mm
Max door width: 1500mm
Door thickness: 44mm

Components

- Panther aluminium top track assembly
- Hanger assembly with V-stops
- 21A Aluminium channel
  Available in 1.5m, 1.8m, 2.1m, 2.4m, 3.0m
- 100 CP Aluminium pelmet (not included in DIY set)
- 965 Mortice claw lock (not included in DIY set)

Standard packed sets

P2 – for door 600-750mm wide
P3 – for door 750-900mm wide
P4 – for door 900-1050mm wide
P5 – for door 1050-1200mm wide
P10 – for door 1200-1500mm wide

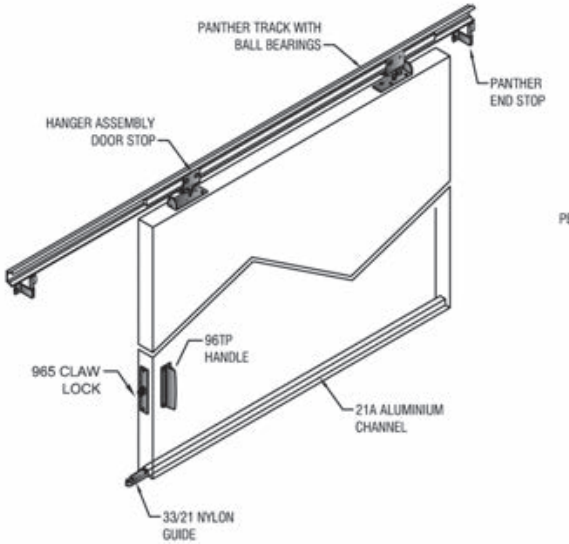

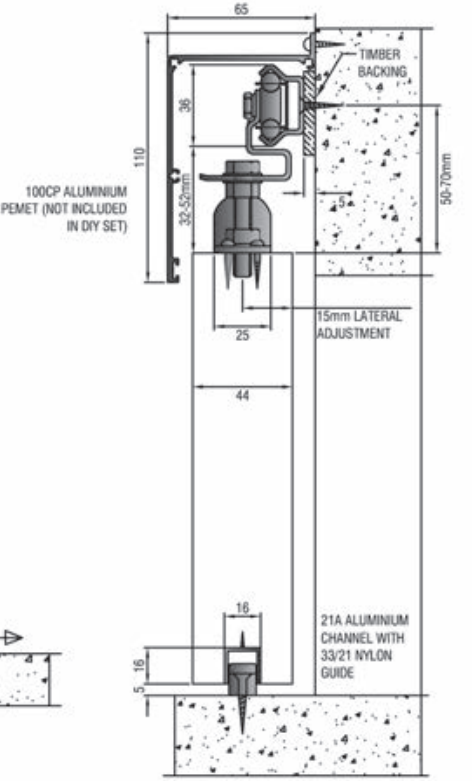

SECTION THROUGH DOOR
SCALE 1:3

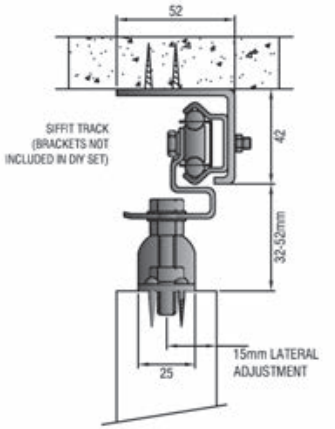

Mechanism

T	DOM	COM		S/FIT				ST 2.0

For specialist projects contact:

Hillaldam SLIDING DOOR SYSTEMS

South Africa: +27 11 626 1001
www.hillaldam.com

Straight sliding door systems
(Domestic, Commercial, Shop fitting, Hospital, Industrial)

Jason

Bottom rolling sliding hardware for timber cabinets and light cupboard doors.

Features

- Smooth running ball-bearing rollers
- Side or mortice fixing roller options

Specifications

Max door mass: 20kg
Max door height: 1000mm
Max door width: 900mm
Door thickness: 16-22mm

Standard packed sets

Size 4J – for 2 doors in 1200mm opening
Size 6J – for 2 doors in 1800mm opening

Components

- 76A Aluminium channel
- 74 Nylon guides
- 72M Side fixing rollers
- 73M Mortice fixing rollers
- 77A Aluminium track
- 265P Finger pull white
- 208 Door stop

NOTE:
- Bottom track offset to top of channel for 72M side fix roller depending on thickness of the door.

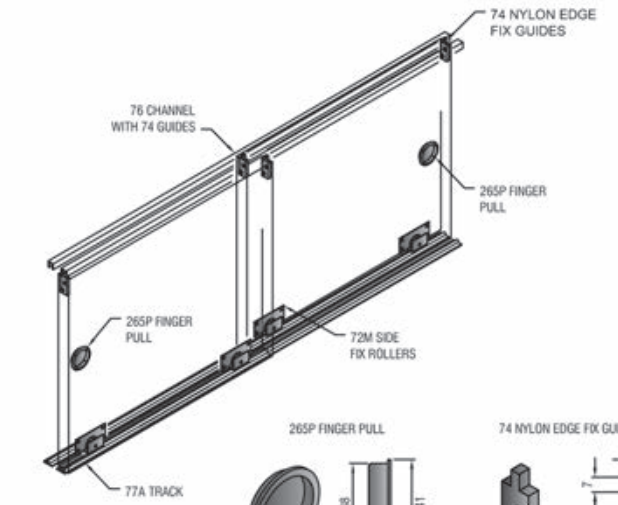

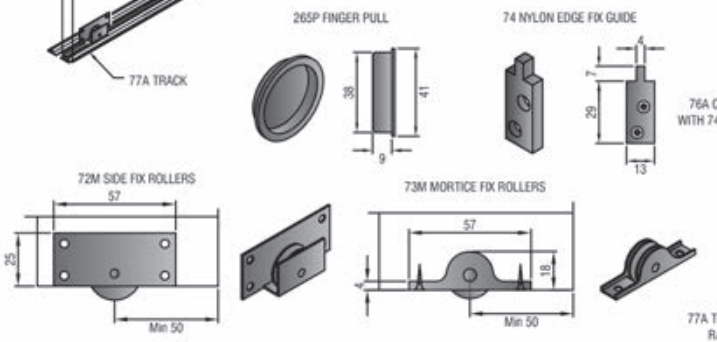

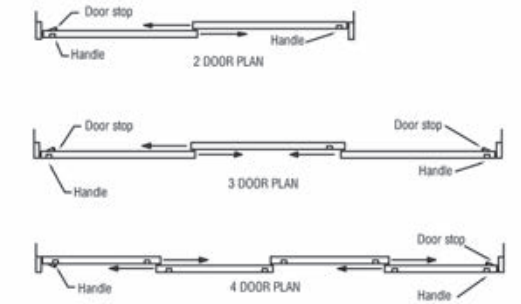

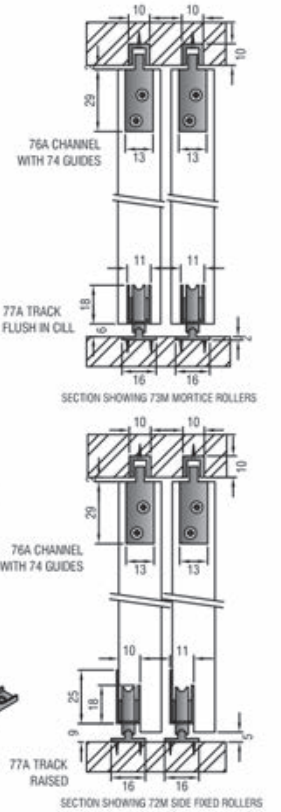

Mechanism

T	DOM	COM		S/FIT	HOS	HOT		ST 3.0

For specialist projects contact:

Hillaldam
SLIDING DOOR SYSTEMS

South Africa: +27 11 626 1001
www.hillaldam.com

Straight sliding door systems
(Domestic, Commercial, Shop fitting, Hospital, Industrial)

Hatch

Bottom rolling sliding hardware for display cabinets, bookcases, hatches, kitchen cupboards and interior windows.

Features

- Quiet rolling action
- Woolpile top guiding

Specifications

Hardware fits 6mm glass
Max panel mass: 20kg
Max panel height: 1000mm
Max panel width: 1000mm
GLASS PANEL SIZE MUST NOT EXCEED 1 sq.m.

Hatch packed sets (does not include locks)

HH4 - for 2 panels in 1200mm opening
HH5 - for 2 panels in 1500mm opening
HH6 - for 2 panels in 1800mm opening

Components

- H201 Anodised aluminium double top channel complete with brush woolpile
- H202 Anodised aluminium double bottom track
- H203 Anodised aluminium shoe rail
- H204 Ball-bearing bottom roller
- H205 Black rail end cap
- H207 Glazing strip
- H206 Chrome or black powder-coated pin lock with 2 keys (handed) (not included in DIY set)
- H208 Chromed finger pull

NOTE:
- Standard finish is natural anodised. Other finishes are available on special order. Top channel and bottom track are available in 6m lengths.

For specialist projects contact:

Hillaldam
SLIDING DOOR SYSTEMS

South Africa: +27 11 626 1001
www.hillaldam.com

Straight sliding door systems
(Domestic, Commercial, Shop fitting, Hospital, Industrial)

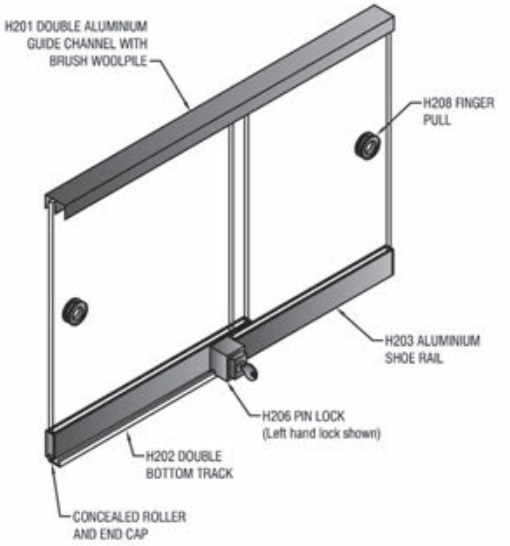

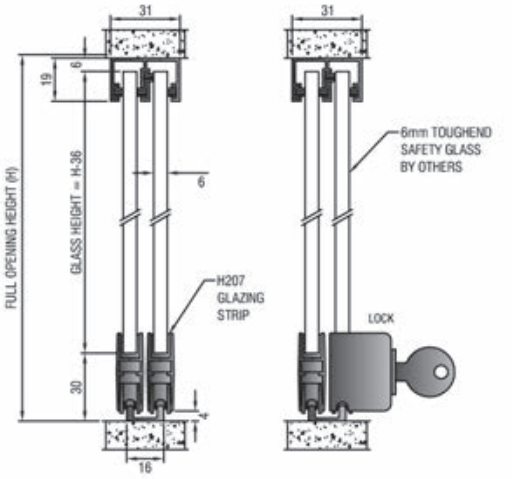

SECTION THROUGH CHANNEL, TRACK AND GLASS
SCALE 1:3

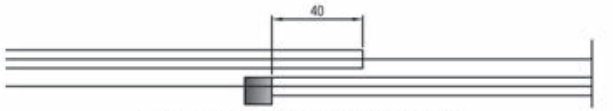

PLAN OF 2 PANELS BIPASSING SHOWING A RECOMMENDED OVERLAP OF 40mm

H208 FINGER PULL
(22mm DIA HOLE IN GLASS)

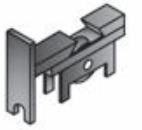

ROLLER AND END CAP

HATCH LOCK
(HANDED)

Mechanism

T	DOM	COM		S/FIT	HOS	HOT		ST 4.0

Double 60

Top hung sliding system for wardrobe and cupboard doors.

Features

- Smooth running ball-bearing hangers
- Double track and cranked hangers for door spacing

Specifications

Max door mass: 30kg
Max door height: 2100mm
Max door width: 900mm
Door thickness: 16-32mm

Standard packed sets

4D - 2 doors in 1200mm opening
5D - 2 doors in 1500mm opening
6D - 2 doors in 1800mm opening
8D - 3 doors in 2400mm opening

Components

- D60 Aluminium top track
- D19 Back hangers
- D20 Front hangers
- 263 Nylon guides
- 265P Finger pulls
- 208 Door stop

NOTE:
- Deep front hanger (D20) and shallow back hanger (D19) for doors up to 22mm thick. For 32mm doors, hangers are reversed.

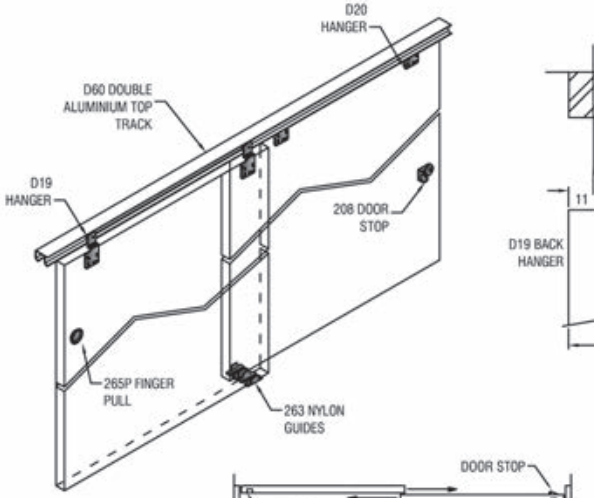

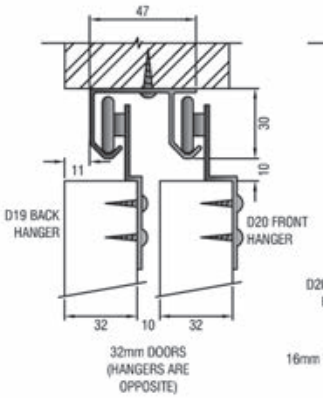

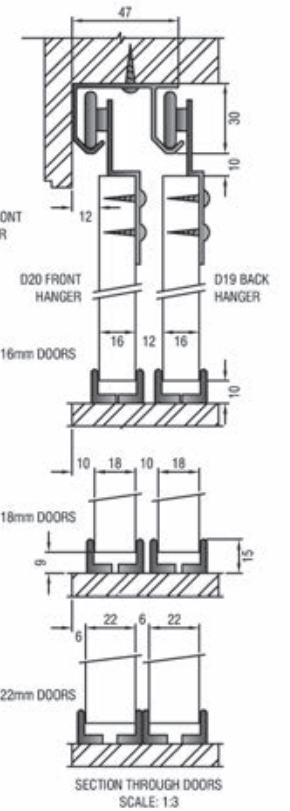

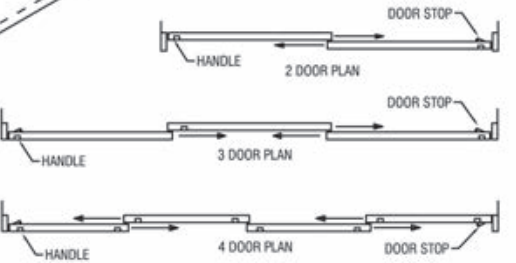

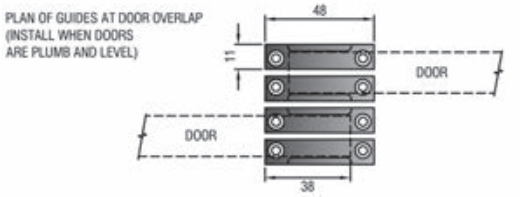

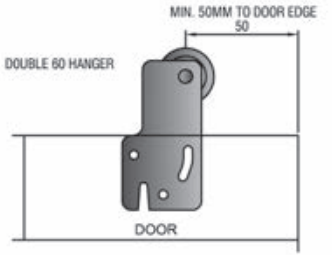

Mechanism

For specialist projects contact:

Hillaldam SLIDING DOOR SYSTEMS

South Africa: +27 11 626 1001
www.hillaldam.com

Straight sliding door systems
(Domestic, Commercial, Shop fitting, Hospital, Industrial)

T	DOM							ST 5.0

Hotel 100

Top hung sliding hardware for hotel wardrobe and commercial cupboard doors.

Features

- Smooth running ball-bearing hangers
- One piece double top track

Specifications

Max door mass: 45kg
Max door height: 2100mm
Max door width: 900mm
Door thickness: 16-32mm

Components

- D60 Aluminium top track
- 5CR (back) and 12CR (front) top fixing hangers – shallow and deep cranked to suit door thickness
- 83/21 Guides
- 21A Aluminium guide channel
- 265P Finger pulls
- 208 Door stop

Standard Packed Sets:

4HW - 2 doors in 1200mm opening
5HW - 2 doors in 1500mm opening
6HW - 2 doors in 1800mm opening
8HW - 3 doors in 2400mm opening

For specialist projects contact:

Hillaldam
SLIDING DOOR SYSTEMS

South Africa: +27 11 626 1001
www.hillaldam.com

Straight sliding door systems
(Domestic, Commercial, Shop fitting, Hospital, Industrial)

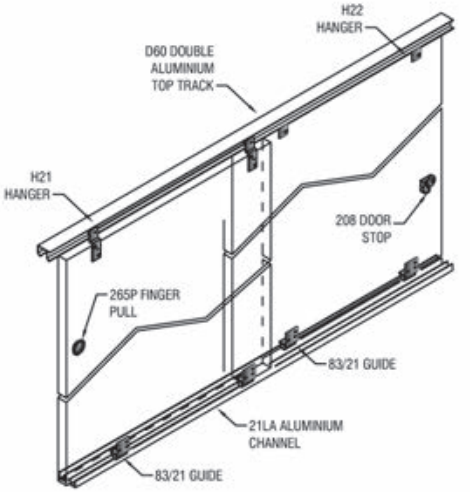

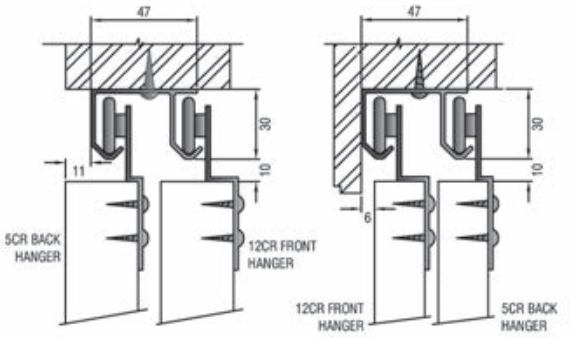

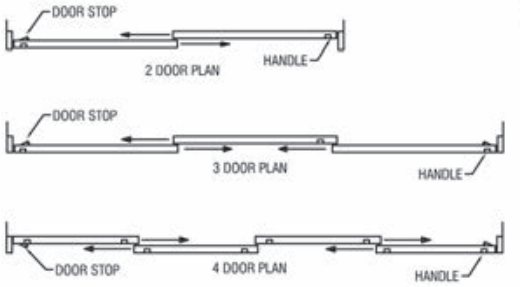

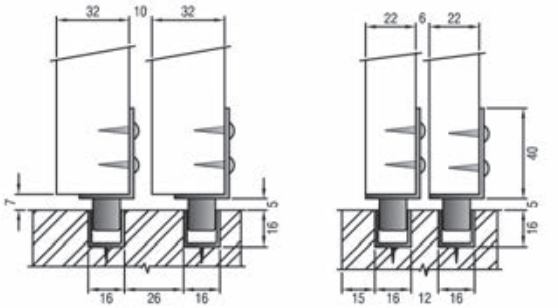

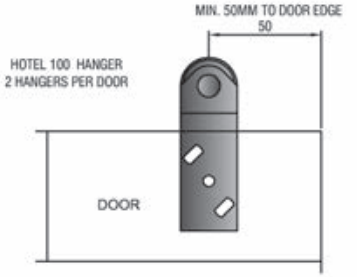

Mechanism

T	DOM	COM			HOS	HOT		ST 6.0

Straightaway 100S

Top hung sliding hardware for steel framed doors or gates up to 100kg.

Features

- Quality ball-bearing hangers
- Proven reliable system

Specifications

Max door mass: 100kg
Max door height: 2500mm
Max door width: 1000mm
Door thickness: min 30mm angle frame or 25mm tube

Components

- A100S Side fixing brackets – 300mm centres
- 100S/100G Steel or galvanised top track
- 0100 Adjustable hangers for steel doors
- 100TF Hangers for timber doors
- 101 Track stop
- 48/19B Guides for steel doors
- 40/19B/N Guide for timber doors
- 19A/19S Steel guide channel
- 46L Door stop (not included in diy set)

NOTE:
- Domestic 100S special DIY pack for max 1000mm wide door, includes brackets, steel track,hangers, guides and guide channel.
- All fittings available in stainless steel for coastal applications.

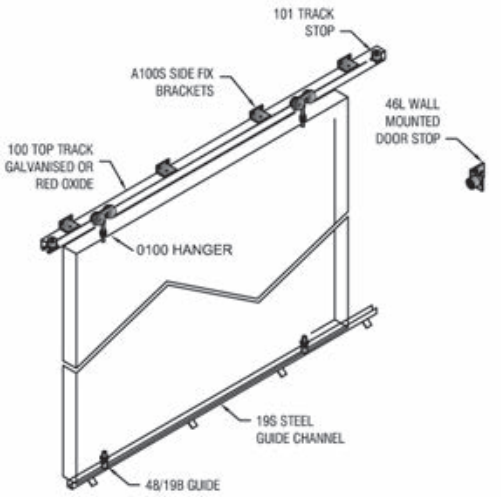

STANDARD LENGTHS:

100 BLACK	- 1.5m; 1.8m; 2.0m; 2.4m; 3.0m; 4.0m; 6.0m; 7.2m
100 RO	- 1.5m; 1.8m; 2.0m; 2.4m; 3.0m; 4.0m
100 GALV.	-1.5m; 1.8m; 2.0m; 2.4m; 3.0m; 4.0m; 6.0m; 7.2m

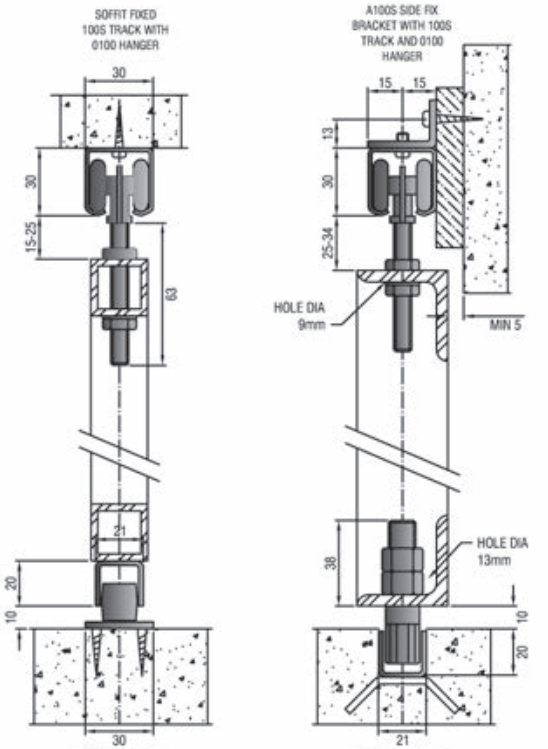

SECTION THROUGH DOOR
SECTION SCALE: 1:3

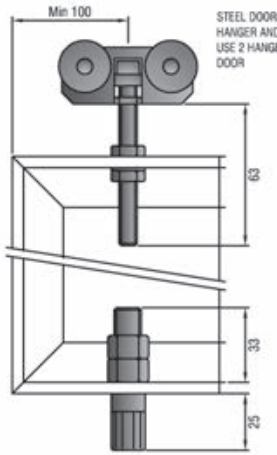

STEEL DOOR ELEVATION SHOWING HANGER AND GUIDE POSITIONS USE 2 HANGER AND 2 GUIDES PER DOOR

40/19B BRASS GUIDE

48/19B BRASS GUIDE

Mechanism

For specialist projects contact:

Hillaldam
SLIDING DOOR SYSTEMS

South Africa: +27 11 626 1001
www.hillaldam.com

Straight sliding door systems
(Domestic, Commercial, Shop fitting, Hospital, Industrial)

T	DOM	COM	IND					ST 7.0

Domestic 100T

Top hung sliding hardware for internal timber or aluminium doors up to 100kg.

Features

- Quality ball-bearing hangers
- Slimline aluminium track
- Clip-on rebate/pelmet*
- Adjustable cosy guide

Specifications

Max door mass: 100kg
Max door height: 2500mm
Max door width: 1000mm
Door thickness: min 30mm

Standard Packed Sets

D2 - for door 600-750mm wide
D3 - for door 750-900mm wide
D4 - for door 900-1050mm wide
D5 - for door 1050-1200mm wide
D10 - for door 1200-1500mm wide

For specialist projects contact:

Hillaldam
SLIDING DOOR SYSTEMS

South Africa: +27 11 626 1001
www.hillaldam.com

Components

- A100A Side fixing brackets – 300mm centres
- 100TA Aluminium top track
- 100PA Aluminium clip-on rebate/pelmet*
- 100TF Top fixing adjustable hangers (Galv. or stainless steel)
- 101 Track stop
- Cosy Guide
- 96TP Handle
- 965 Mortice claw lock* (timber door)

* Not included in DIY set

NOTE:

- Domestic 100T special DIY pack for max 1000mm wide door, includes top track, hangers, guide, guide channel and 96TP handle.
- All fittings available in stainless steel for coastal applications.

Straight sliding door systems
(Domestic, Commercial, Shop fitting, Hospital, Industrial)

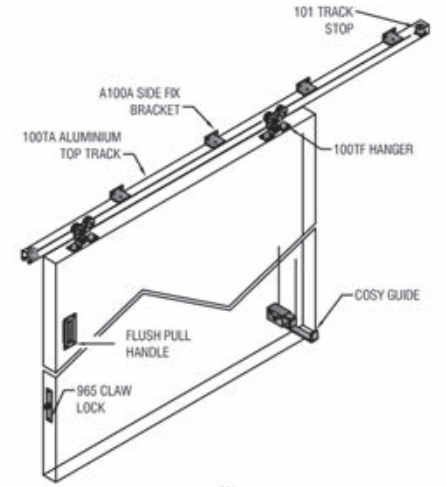

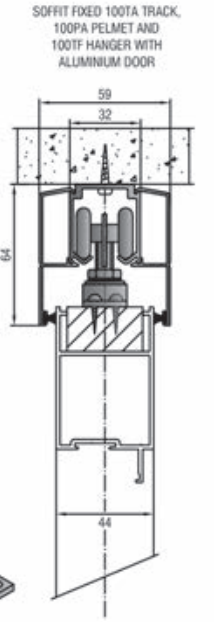

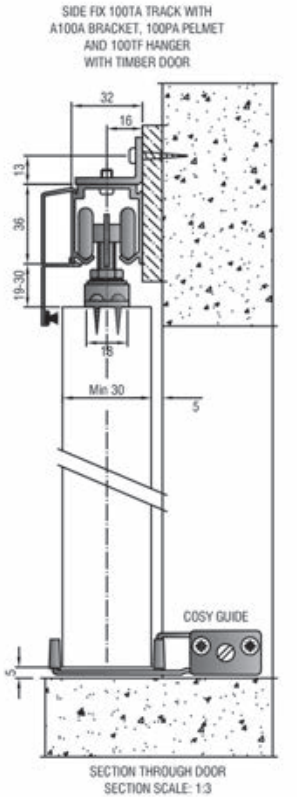

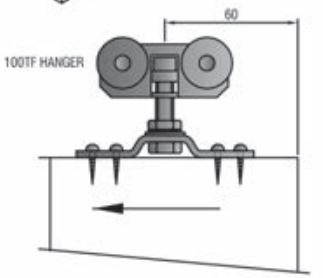

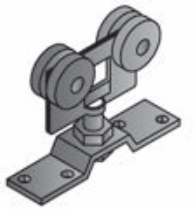

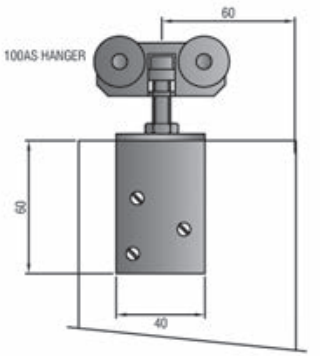

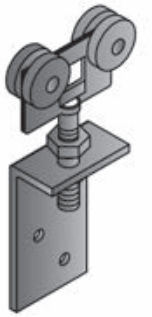

Mechanism

T	DOM	COM		S/FIT	HOS	HOT		ST 8.0

Straightaway 100T Cavity

Top hung sliding hardware for timber or aluminium doors up to 100kg sliding into a brick cavity.

Features

- Quality ball-bearing hangers
- Steel or aluminium track
- Concealed guiding
- Removable panels for inspection

Specifications

Max door mass: 100kg
Max door height: 2500mm
Max door width: 1000mm
Door thickness: min 30mm

The area of a single sliding leaf should be related to all other factors.

Components

- A100A Side fixing brackets – 300mm centres
- 100S Steel top track
  or 100TA Aluminium top track
- 100TF Top fixing adjustable hangers
  (Galv. or stainless steel)
- 46L Cavity stop or 101 Track stop
- 21A Aluminium guide channel
- 33C/21 Cavity guide
- 503NA/GA Flush pull handles
- 965 Claw bolt lock (timber door)

NOTE:
- All fittings available in stainless steel for coastal applications.
- Various finishes available.

For specialist projects contact:

Hillaldam
SLIDING DOOR SYSTEMS

South Africa: +27 11 626 1001
www.hillaldam.com

Straight sliding door systems
(Domestic, Commercial, Shop fitting, Hospital, Industrial)

SOFFIT FIXED 100TA TRACK AND 100TF HANGER WITH TIMBER DOOR

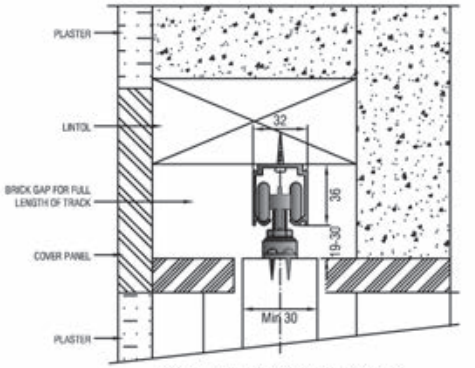

SECTION THROUGH DOOR AND BRICK CAVITY
SCALE: 1:4

SIDE FIX 100TA TRACK, A100A SIDE FIX BRACKET AND 100TF HANGER WITH TIMBER DOOR

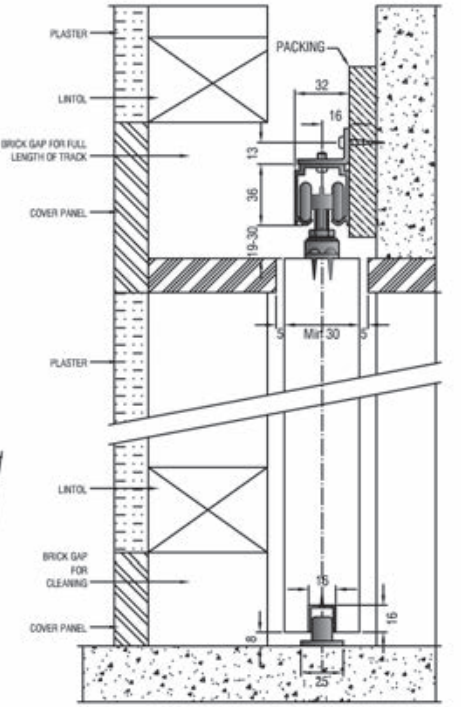

SECTION THROUGH DOOR WITH 21A ALUMINIUM CHANNEL AND 33C/21 CAVITY GUIDE IN A BRICK CAVITY
SCALE: 1:4

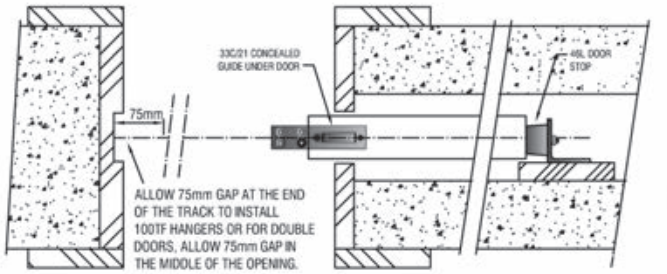

PLAN OF DOOR IN THE OPEN POSITION SHOWING POSITION OF FLOOR GUIDE AND DOOR STOP.

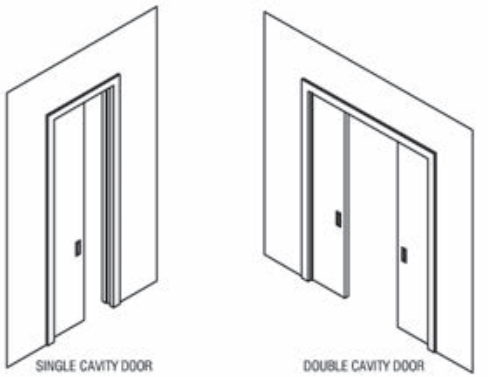

SINGLE CAVITY DOOR

DOUBLE CAVITY DOOR

Mechanism

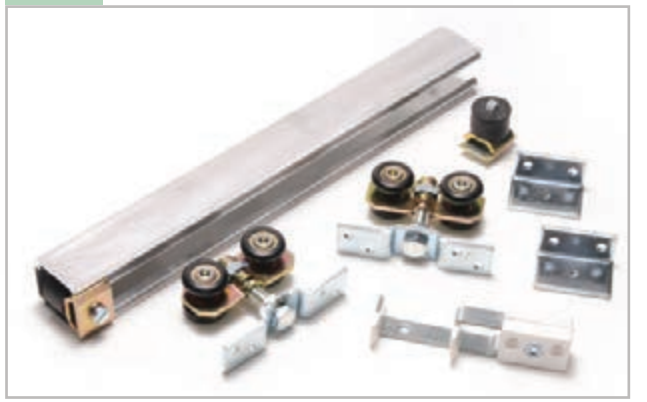

T	DOM	COM		S/FIT	HOS	HOT		ST 9.0

Straightaway 100A

Top hung sliding hardware for internal timber or aluminium doors up to 100kg.

Features

- Quality ball-bearing hangers
- Slimline aluminium track
- Clip-on rebate/pelmet

Specifications

Max door mass: 100kg
Max door height: 2500mm
Max door width: 1000mm
Door thickness: min 30mm

The area of a single sliding leaf should be related to all other factors.

Components

- A100A Side fixing brackets – 300mm centres
- 100TA Aluminium top track
- 100PA Aluminium clip-on rebate/pelmet*
- 100TF Top fixing adjustable hangers (Galv. or stainless steel)
- 101 Track stop
- 40/19N Guide
- 503NA/GA Flush pull handle
- 965 Mortice claw lock (timber door)

NOTE:
- All fittings available in stainless steel for coastal applications.
- Various finishes available.

For specialist projects contact:

Hillaldam
SLIDING DOOR SYSTEMS

South Africa: +27 11 626 1001
www.hillaldam.com

Straight sliding door systems
(Domestic, Commercial, Shop fitting, Hospital, Industrial)

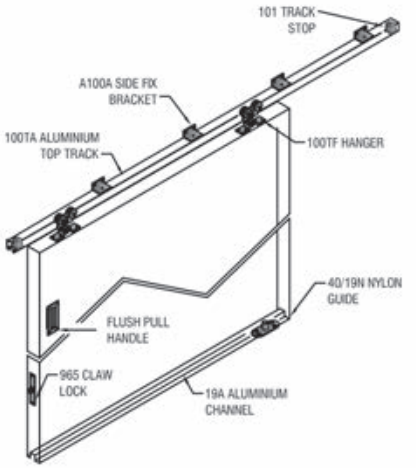

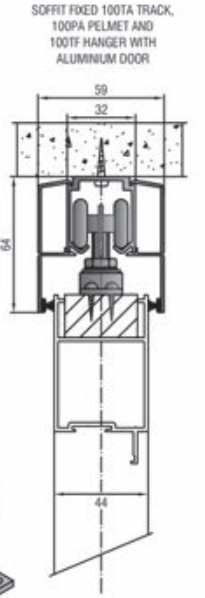

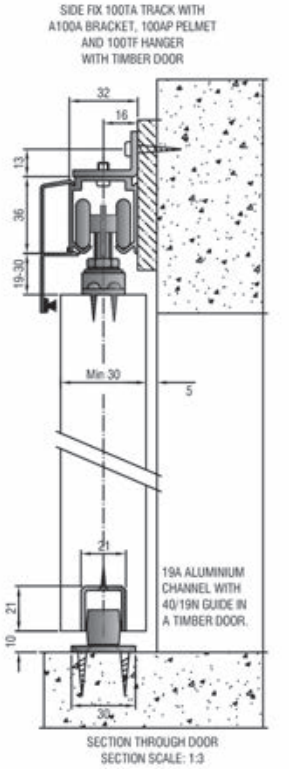

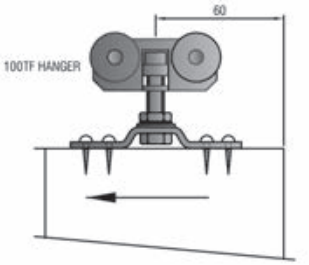

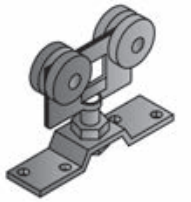

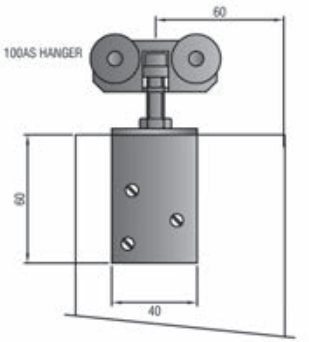

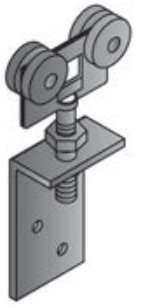

Mechanism

T	DOM	COM		S/FIT	HOS	HOT		ST 10.0

Straightaway 200S

Top hung sliding hardware for steel framed doors or gates up to 200kg.

Features

- Quality ball-bearing hangers
- Primed or galvanised track

Specifications

Max door mass: 200kg
Max door height: 3000mm
Max door width: 2000mm
Door thickness: 50mm
FOR EXPOSED DOORS,
CONSIDER WIND PRESSURE.
Max door surface area: 6 sq.m.

The area of a single sliding leaf should be related to all other factors.

Components

- A200S Side fixing or R200S top fixing brackets – max 900mm centres
- 200RO Steel or 200G galvanised top track
- 0200 Adjustable hangers
- 48/19B or 40/19B Guides
- 19S Steel guide channel
- 44x1 Door stop
- 210 Grab handle
- 1S Drop bolt
- 46/200 track stop

For specialist projects contact:

Hillaldam
SLIDING DOOR SYSTEMS

South Africa: +27 11 626 1001
www.hillaldam.com

Straight sliding door systems
(Domestic, Commercial, Shop fitting, Hospital, Industrial)

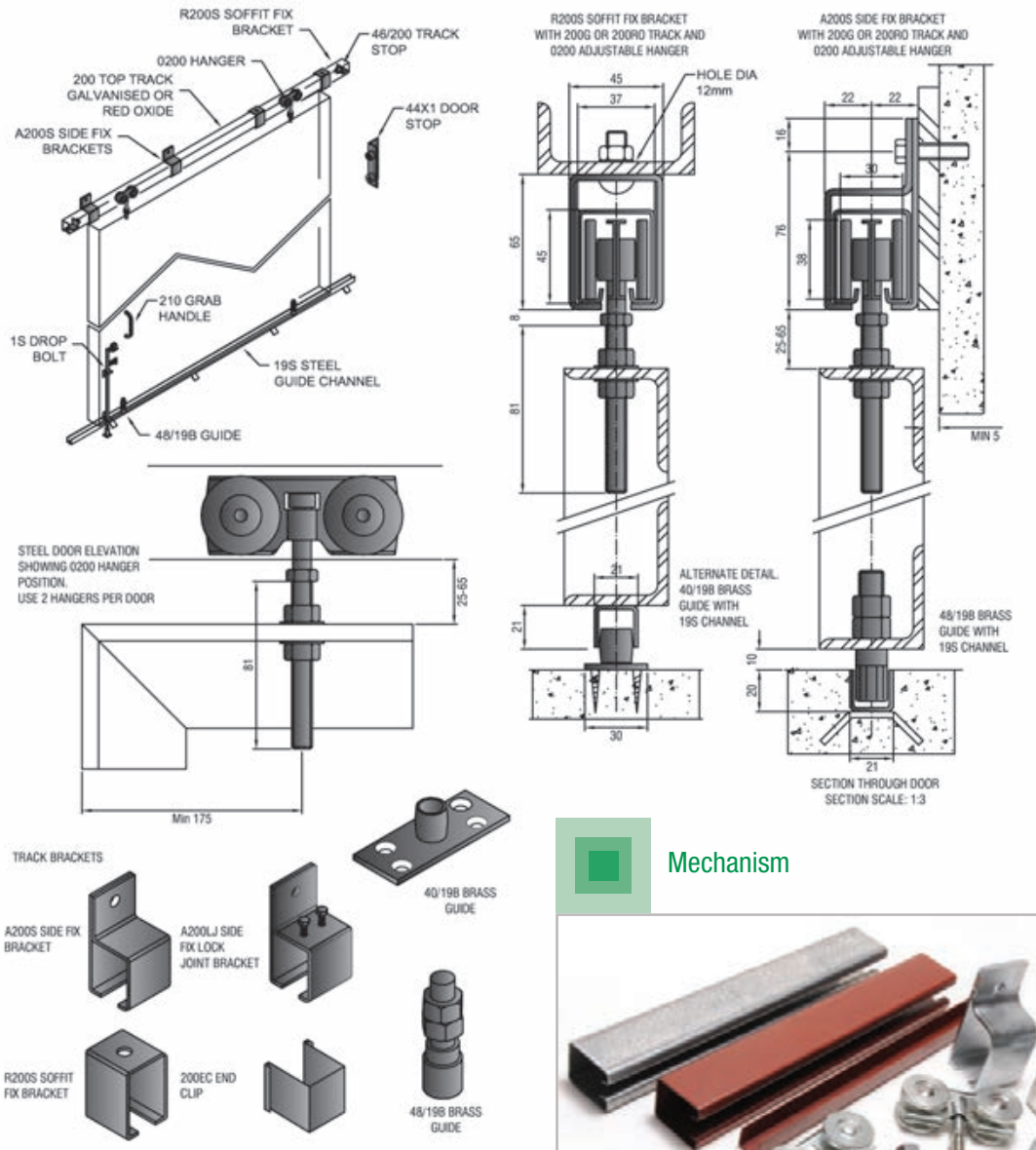

Mechanism

T			IND					ST 11.0

Straightaway 200T

Top hung sliding hardware for timber doors up to 200kg.

Features

- Quality ball-bearing hangers
- Primed or galvanised track

Specifications

Max door mass: 200kg
Max door height: 3000mm
Max door width: 2000mm
Door thickness: 50mm
FOR EXPOSED DOORS,
CONSIDER WIND PRESSURE.
Max door surface area: 6 sq.m.

The area of a single sliding leaf should be related to all other factors.

Components

- A200S Side fixing or R200S top fixing brackets – max 900mm centres
- 200RO Steel or 200G galvanised top track
- 200S/TF (top fixing) or 200S/AS adjustable hangers (apron)
- 40/19B Guides
- 19S Steel guide channel
- 44X1 Door stop
- 210 Grab handle
- 965 Morticle claw lock
- 1S Drop bolt
- 46/200 Track stop

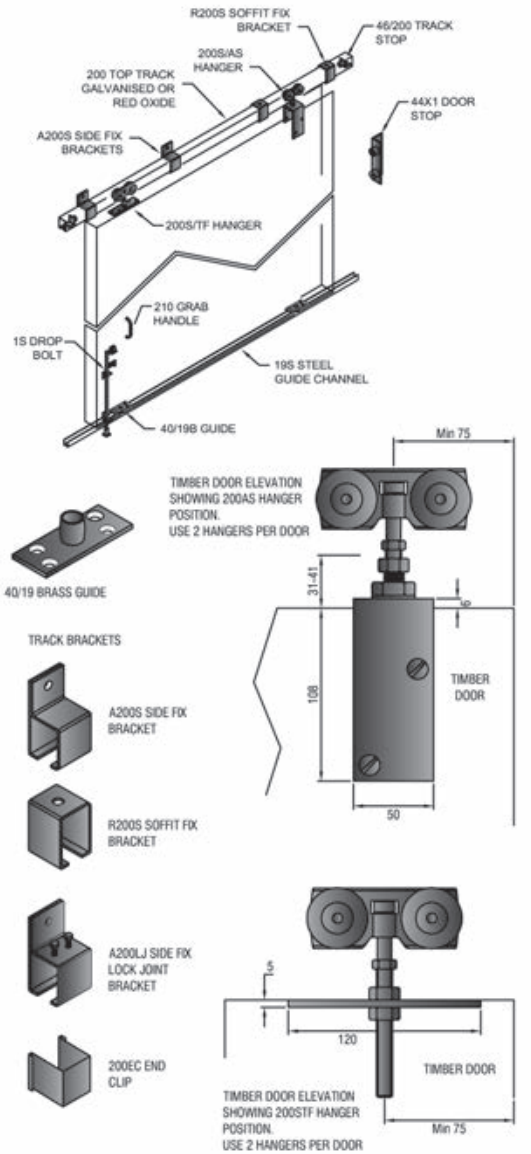

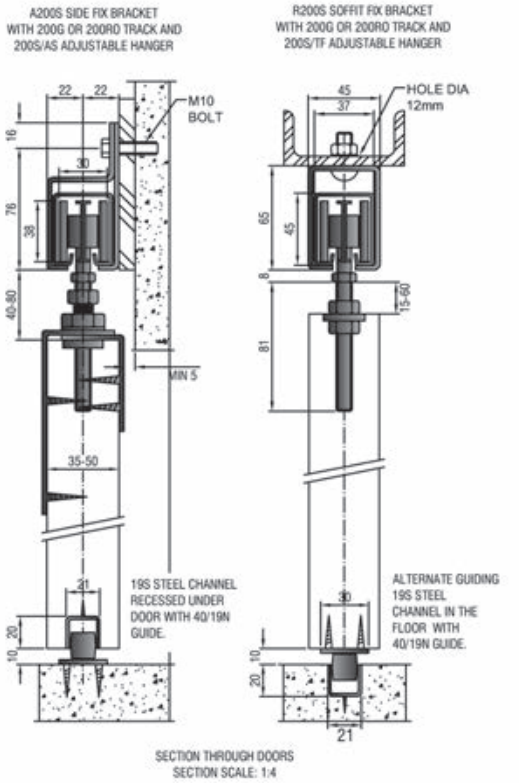

Mechanism

For specialist projects contact:

Hillaldam
SLIDING DOOR SYSTEMS

South Africa: +27 11 626 1001
www.hillaldam.com

Straight sliding door systems
(Domestic, Commercial, Shop fitting, Hospital, Industrial)

T			IND					ST 12.0

Straightaway 200A

Top hung sliding hardware for interior aluminium or timber doors up to 200kg.

Features

- Strong aluminium track
- Optional clip-on rebate/pelmet
- Quality proven hardware
- Concealed guiding
- Ideal for offices, hospitals, hotels
- Easy fit side fix brackets

Specifications

Max door mass: 200kg
Max door height: 2500mm
Max door width: 1500mm
Door thickness: 40 - 44mm

The area of a single sliding leaf should be related to all other factors.

Components

- A200A Side fixing brackets - max 400mm centres
- 200TA Aluminium top track
- 200TO Take-out piece
- 200PA Aluminium clip-on rebate/pelmet
- 200TF Top fix hangers (galv or s/steel)
- 19A Aluminium channel
- 40/19N Bottom guide
- 200ES Track stop (galv or s/steel)
- 200EC Track end caps (small/large)
- 503NA/GA Flush pull handle
- 965 Mortice claw lock (timber door)

NOTE:
- All fittings available in stainless steel for coastal applications.
- Various finishes available.

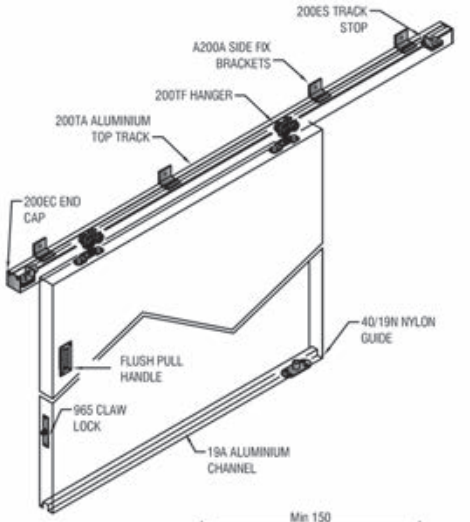

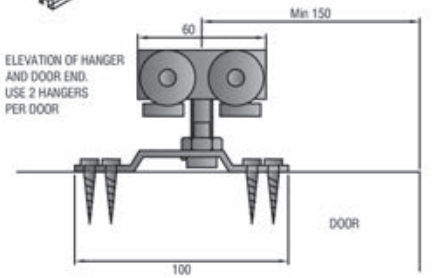

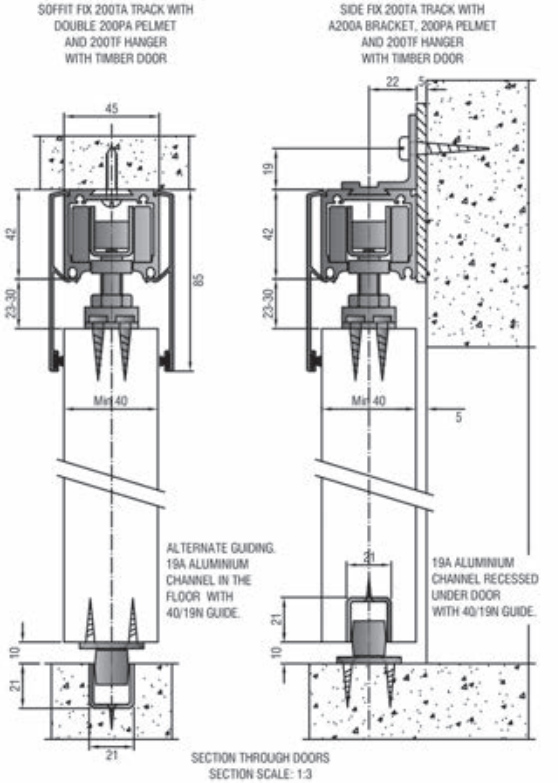

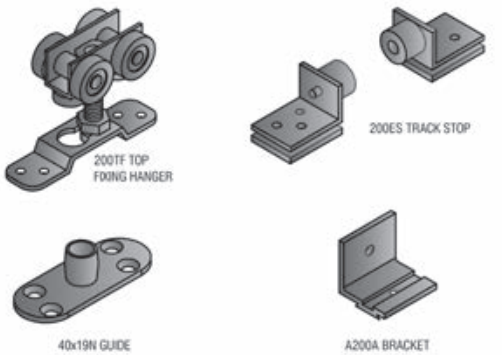

Mechanism

For specialist projects contact:

Hillaldam SLIDING DOOR SYSTEMS

South Africa: +27 11 626 1001
www.hillaldam.com

Straight sliding door systems
(Domestic, Commercial, Shop fitting, Hospital, Industrial)

T	DOM	COM		S/FIT	HOS	HOT		ST 13.0

Straightaway 200A/GL

Top hung sliding hardware for frameless glass doors with top rail.

Features

- Strong aluminium track
- Quality proven hardware
- Slimline rail with glass bolt-through
- Clip-on cover plate
- Ideal for residences, offices, hospitals, hotels

Specifications

Max door mass: 200kg
Max door height: 2500mm
Max door width: 1500mm
Glass: 10-12mm toughened
(15mm option available)

The area of a single sliding leaf should be related to all other factors.

Components

- A200A Side fixing brackets - max 400mm centres
- 200TA Aluminium top track
- 200TO Take-out piece
- 200PA Aluminium clip-on pelmet/rebate
- GL Top and bottom rail with cover plates
- 200GL Hangers
- 122 Brush welt
- BG15 Bottom guides
- 200ES Track stop
- 200EC Track end caps (small/large)
- GL Cover plates
- GL End caps

NOTE:
- All fittings available in stainless steel for coastal applications.
- Various finishes available.

For specialist projects contact:

Hillaldam
SLIDING DOOR SYSTEMS

South Africa: +27 11 626 1001
www.hillaldam.com

Straight sliding door systems
(Domestic, Commercial, Shop fitting, Hospital, Industrial)

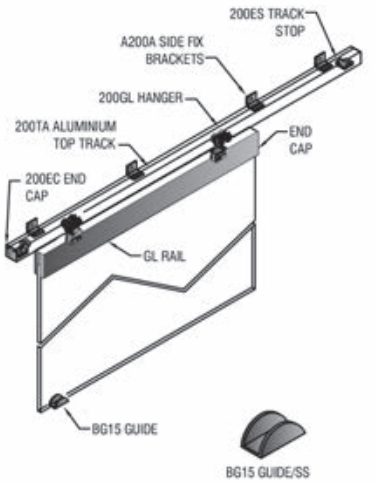

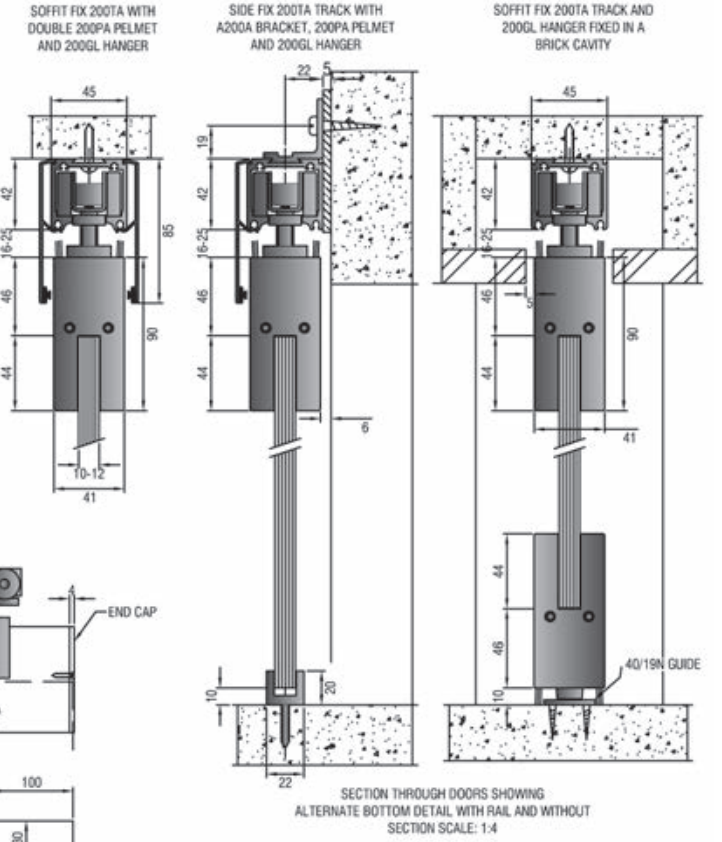

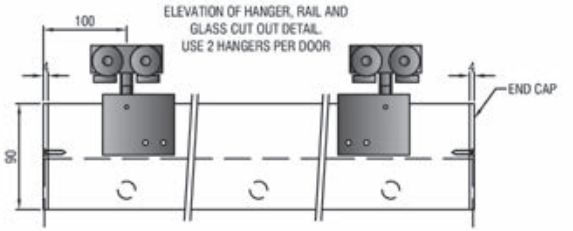

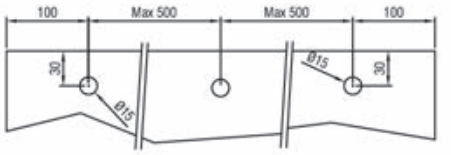

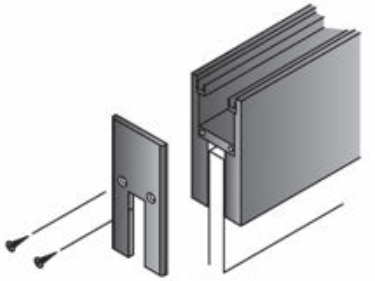

RAIL AND END CAP

Mechanism

T	DOM	COM		S/FIT	HOS	HOT		ST 14.0

Straightaway 400/600S

Top hung sliding hardware for steel framed doors up to 400/600kg.

Features

- Quality ball-bearing hangers
- Primed or galvanised track

Specifications

Max door mass: 400kg (400 track)
600kg (600 track)
Max door height: 3500mm
Max door width: 2500mm (400 track)
3000mm (600 track)
Door thickness: 50-65mm
FOR EXPOSED DOORS,
CONSIDER WIND PRESSURE.
Max door surface area: 8 sq.m.

The area of a single sliding leaf should be related to all other factors.

Components

- A460S Side fixing or R460S top fixing brackets – max 900mm centres
- 400RO Steel or 400G/600G galvanised top track
- 0460 Adjustable hangers
- 48/25B Guides
- 25S Steel guide channel
- 44X1 Door stop
- 210 Grab handle
- 1S Drop bolt

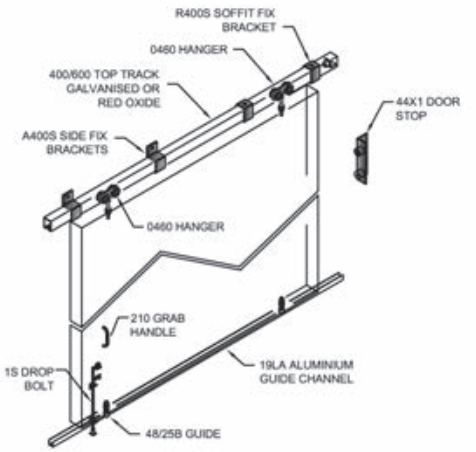

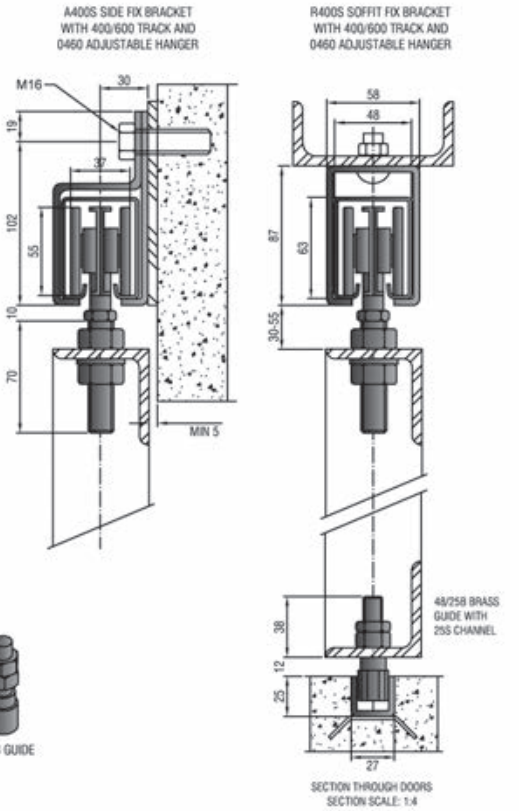

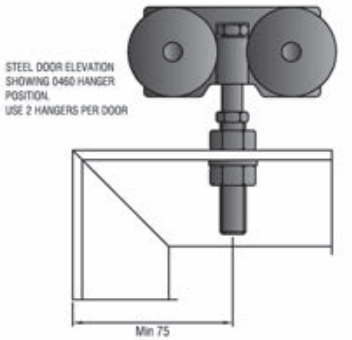

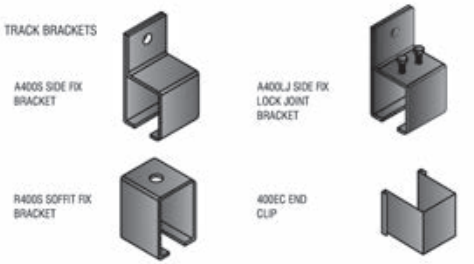

Mechanism

For specialist projects contact:

Hillaldam
SLIDING DOOR SYSTEMS

South Africa: +27 11 626 1001
www.hillaldam.com

Straight sliding door systems
(Domestic, Commercial, Shop fitting, Hospital, Industrial)

T			IND					ST 15.0

Straightaway 400/600T

Top hung sliding hardware for timber doors up to 400/600kg.

Features

- Quality ball-bearing hangers
- Primed or galvanised track

Specifications

Max door mass: 400kg (400 track)
600kg (600 track)
Max door height: 3500mm
Max door width: 2500mm (400 track)
3000mm (600 track)
Door thickness: Min 50mm
FOR EXPOSED DOORS,
CONSIDER WIND PRESSURE.
Max door surface area: 8 sq.m.

The area of a single sliding leaf should be related to all other factors.

Components

- A460S Side fixing or R460S top fixing brackets – max 900mm centres
- 400RO Steel or 400G/600G galvanised top track
- 460AS Adjustable hangers
- 40/25B Guides
- 25S Steel guide channel
- 44X1 Door stop
- 210 Grab handle
- 965 Morticle claw lock
- 1S Drop bolt

For specialist projects contact:

Hillaldam
SLIDING DOOR SYSTEMS

South Africa: +27 11 626 1001
www.hillaldam.com

Straight sliding door systems
(Domestic, Commercial, Shop fitting, Hospital, Industrial)

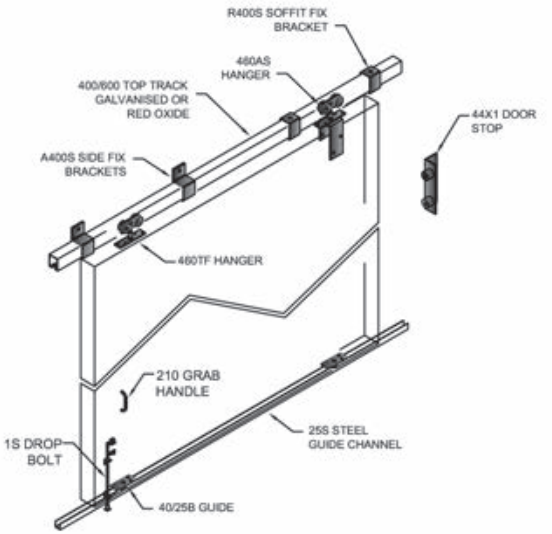

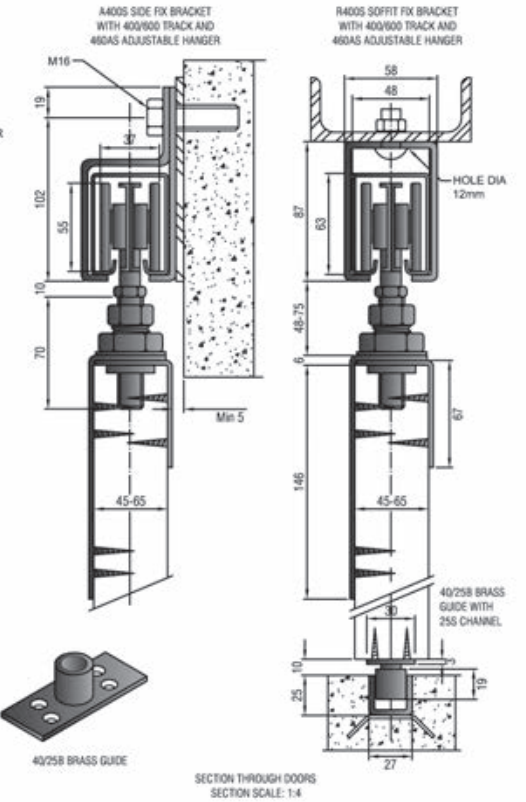

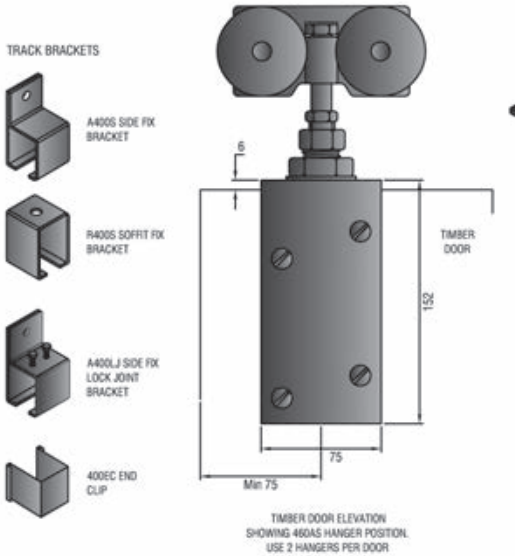

Mechanism

T			IND					ST 16.0

Straightaway 400A

Top hung sliding hardware for interior aluminium or timber doors up to 400kg.

Features

- Strong aluminium track
- Optional clip-on rebate/pelmet
- Quality proven hardware
- Concealed guiding
- Ideal for offices, hospitals, hotels

Specifications

Max door mass: 400kg
Max door height: 3000mm
Max door width: 2000mm
Door thickness: 44mm

The area of a single sliding leaf should be related to all other factors.

Components

- A400A Side fixing brackets - max 500mm centres
- 400TA Aluminium top track
- 400TO Take-out piece
- 400PA Aluminium clip-on rebate/pelmet
- 400TF (top fix) or 400AS (apron fix) hangers
- 19A Aluminium guide channel
- 33 fibre or 40/19N Bottom guide
- 503NA/GA Flush pull handle
- 400ES Track stop
- 965 Morticle claw lock (timber door)

NOTE:
- All fittings available in stainless steel for coastal applications.
- Various finishes available.

For specialist projects contact:

Hillaldam
SLIDING DOOR SYSTEMS

South Africa: +27 11 626 1001
www.hillaldam.com

Straight sliding door systems
(Domestic, Commercial, Shop fitting, Hospital, Industrial)

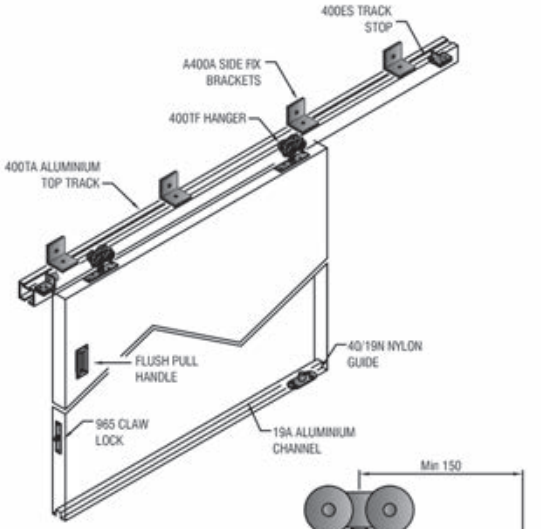

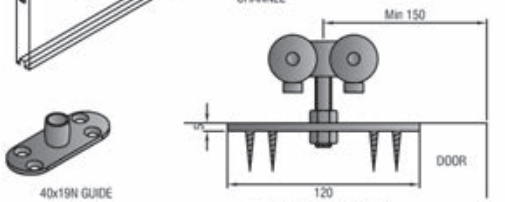

40x19N GUIDE

ELEVATION OF HANGER AND DOOR END.USE 2 HANGERS PER DOOR

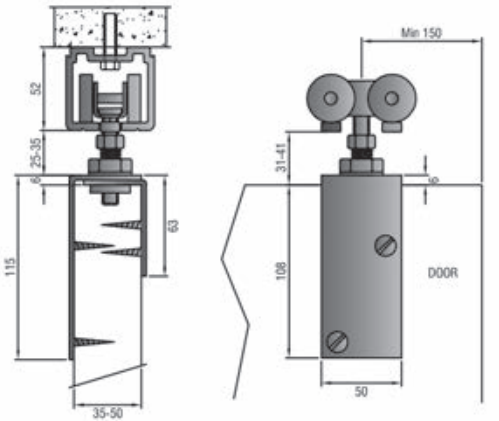

SOFFIT FIX 400TA TRACK WITH 400AS HANGER
SECTION THROUGH DOORS
SECTION SCALE: 1:4

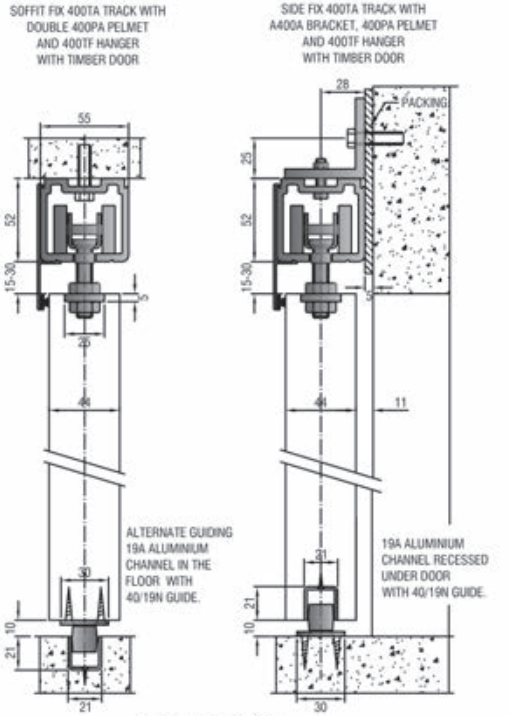

SECTION THROUGH DOORS
SECTION SCALE: 1:4

Mechanism

T	DOM	COM		S/FIT	HOS	HOT		ST 17.0

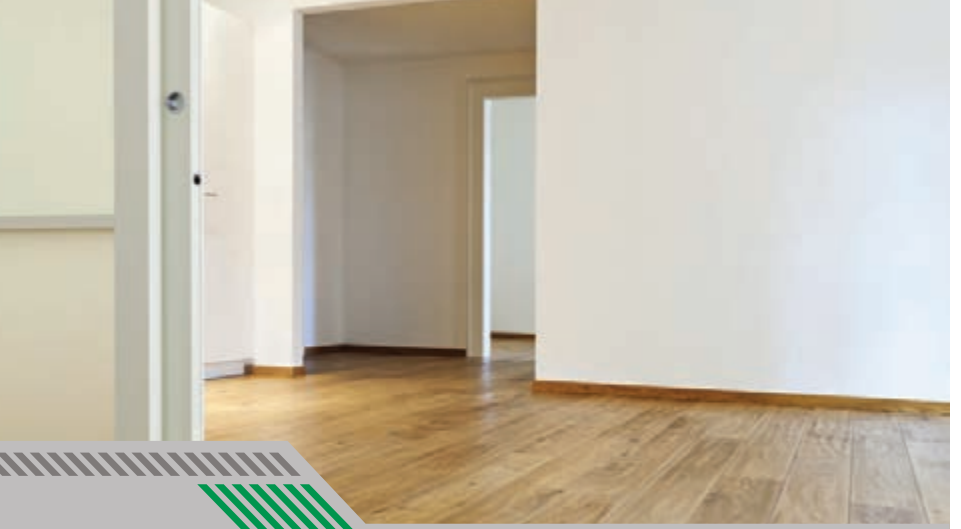

Straightaway 400A Cavity

Top hung sliding hardware for frameless glass doors with top rail.

Features

- Strong aluminium track
- Quality proven hardware
- Concealed guiding
- Removable panels for inspection

Specifications

Max door mass: 400kg
Max door height: 3000mm
Max door width: 2000mm
Door thickness: 44mm

The area of a single sliding leaf should be related to all other factors.

Components

- A400A Side fixing brackets – max 500mm centres
- 400TA Aluminium top track
- 400TO Take-out piece
- 400PA aluminium clip-on rebate/pelmet
- 400TF (top fix) or (apron fix) 400AS hanger
- 400ES Track stop
- 19A aluminium guide channel
- 33 Fibre bottom guide
- 503NA/GA Flush pull handle
- 965 Mortice claw lock

NOTE:
- All fittings available in stainless steel for coastal applications.
- Various finishes available.

For specialist projects contact:

Hillaldam
SLIDING DOOR SYSTEMS

South Africa: +27 11 626 1001
www.hillaldam.com

Straight sliding door systems
(Domestic, Commercial, Shop fitting, Hospital, Industrial)

SOFFIT FIXED 400TA TRACK AND 400TF HANGER WITH TIMBER DOOR

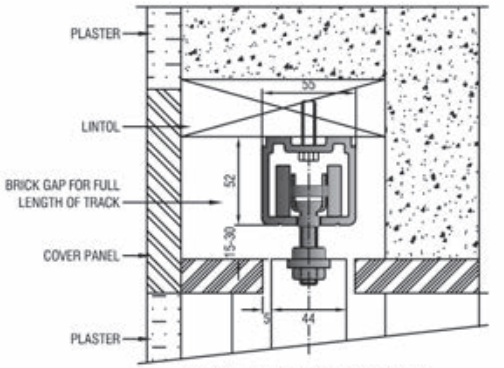

SECTION THROUGH DOOR AND BRICK CAVITY
SCALE: 1:4

SIDE FIX 400TA TRACK, A400A SIDE FIX BRACKET AND 400TF HANGER WITH TIMBER DOOR

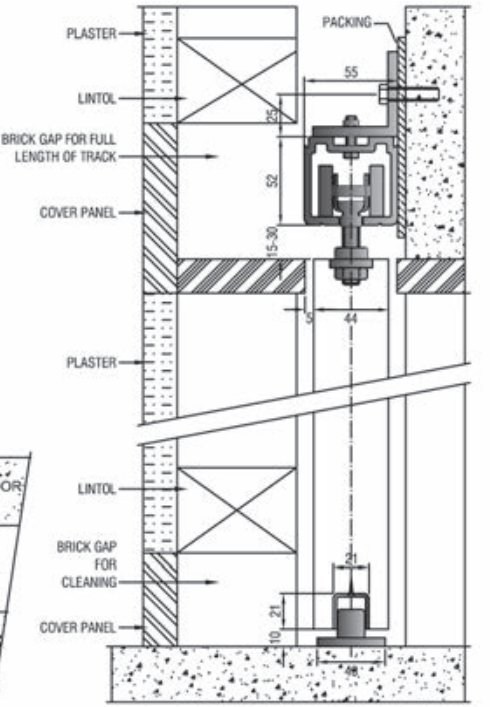

SECTION THROUGH DOOR WITH 19A ALUMINIUM CHANNEL AND 33C/19 FIBRE CAVITY GUIDE
SCALE: 1:4

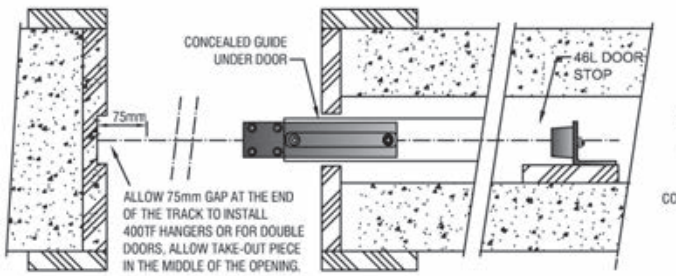

PLAN OF DOOR IN THE OPEN POSITION SHOWING POSITION OF FLOOR GUIDE AND DOOR STOP.

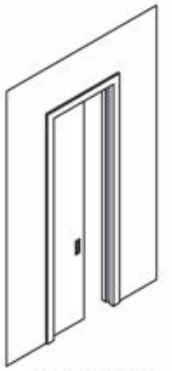

SINGLE CAVITY DOOR

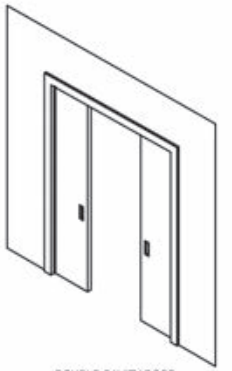

DOUBLE CAVITY DOOR

Mechanism

T	DOM	COM		S/FIT	HOS	HOT		ST 18.0

Straightaway 400A/GL

Top hung sliding hardware for frameless glass doors with top rail.

Features

- Strong aluminium track
- Quality proven hardware
- Slimline rail with glass bolt-through
- Clip-on cover plate
- Ideal for offices, hospitals, hotels

Specifications

Max door mass: 400kg
Max door height: 3000mm
Max door width: 1500mm
Glass: 10-12mm toughened
(15mm option available)

The area of a single sliding leaf should be related to all other factors.

Components

- A400A Side fixing brackets – max 500mm centres
- 400TA Aluminium top track
- 400PA Aluminium clip-on rebate/pelmet
- 400TO Take-out piece
- GL Top and bottom rail with cover plates
- 400GL Hangers
- 122 Brush welt
- BG15 Bottom guides
- 400ES Track stop
- GL Cover plates
- GL End caps

NOTE:
- All fittings available in stainless steel for coastal applications.
- Various finishes available.

For specialist projects contact:

Hillaldam SLIDING DOOR SYSTEMS

South Africa: +27 11 626 1001
www.hillaldam.com

Straight sliding door systems
(Domestic, Commercial, Shop fitting, Hospital, Industrial)

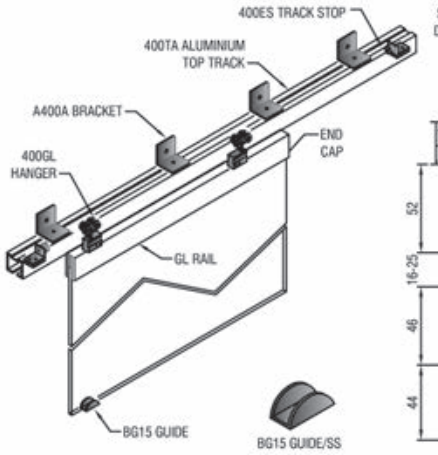

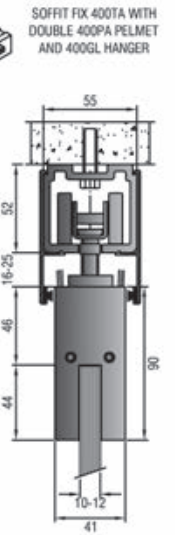

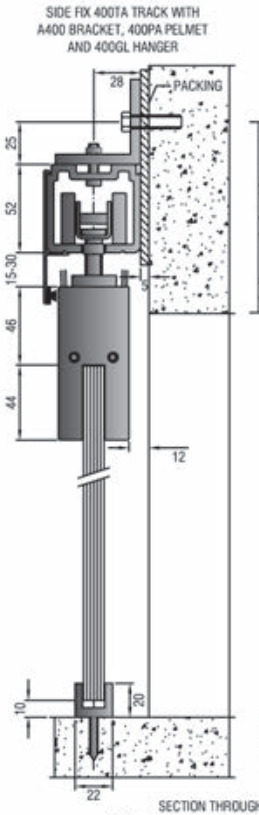

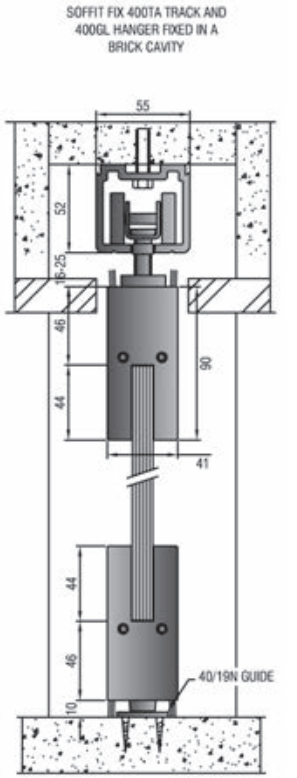

SECTION THROUGH DOORS SHOWING ALTERNATE BOTTOM DETAIL WITH RAIL AND WITHOUT
SECTION SCALE: 1:4

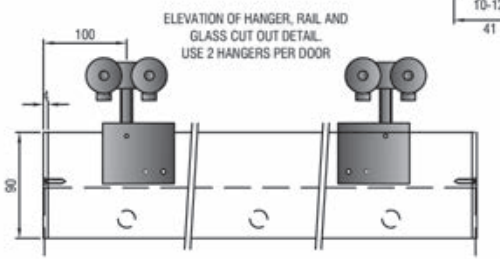

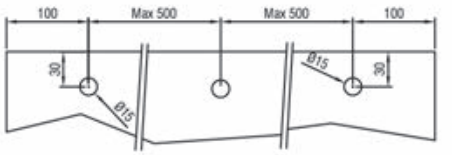

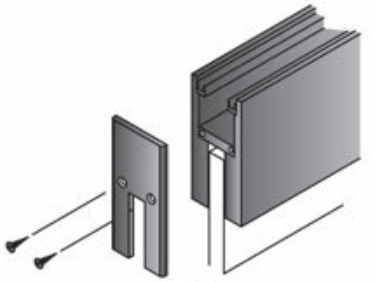

RAIL AND END CAP

Mechanism

T	DOM	COM		S/FIT	HOS	HOT		ST 19.0

Straightaway 600A

Top hung sliding hardware for interior aluminium or timber doors up to 600kg.

Features

- Strong aluminium track
- Quality proven hardware
- Concealed guiding
- Ideal for offices, hospitals, hotels, shopping centres

Specifications

Max door mass: 600kg
Max door height: 4000mm
Max door width: 3000mm
Door thickness: 44mm

The area of a single sliding leaf should be related to all other factors.

Components

- A600A Side or soffit fixing brackets
- 600TA Aluminium top track
- 600TO Take-out piece
- 600TF (top fix) or 600AS (apron fix) hanger
- 600ES Track stop
- 19A Aluminium guide channel
- 40T/19N Twin bottom nylon guide
- 503NA/GA Flush pull handle

NOTE:
- All fittings available in stainless steel for coastal applications.
- Various finishes available.

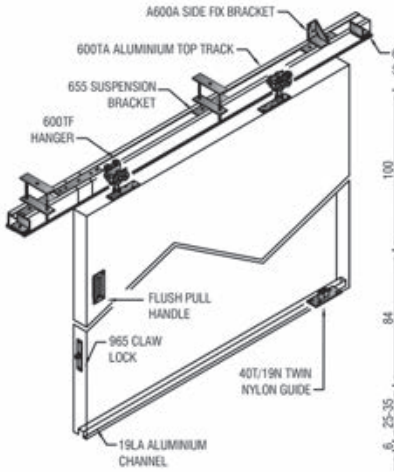

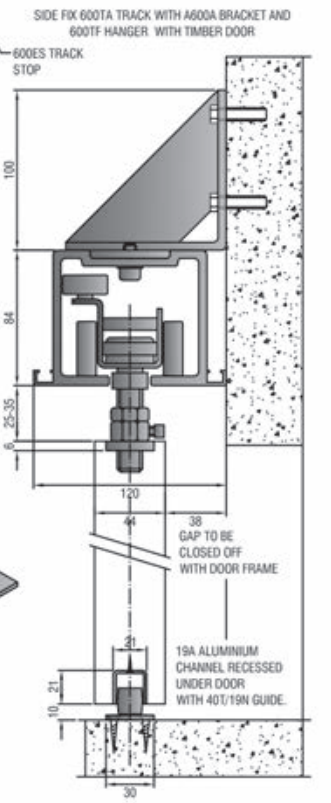

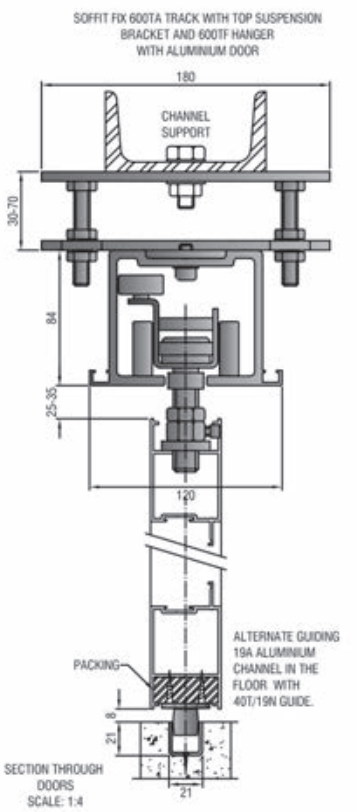

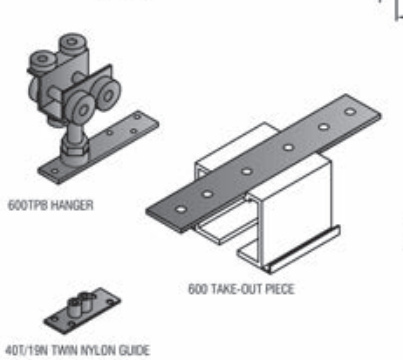

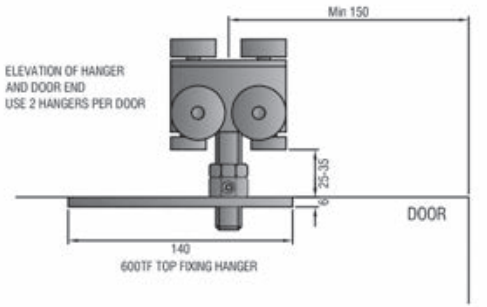

Mechanism

T		COM		S/FIT	HOS	HOT		ST 20.0

For specialist projects contact:

Hillaldam SLIDING DOOR SYSTEMS

South Africa: +27 11 626 1001
www.hillaldam.com

Straight sliding door systems
(Domestic, Commercial, Shop fitting, Hospital, Industrial)

Straightaway 1000S

Top hung sliding hardware for steel framed doors up to 1000kg.

Features

- Quality ball-bearing hangers
- Primed or galvanised track

Specifications

Max door mass: 1000kg
Max door height: 5000mm
Max door width: 4000mm
Door thickness: Min 65mm
FOR EXPOSED DOORS,
CONSIDER WIND PRESSURE.
Max door surface area: 20 sq.m.

The area of a single sliding leaf should be related to all other factors.

Components

- A1000S Side fixing or R1000 top fixing brackets – max 900mm centres
- 1000RO Steel or 1000G galvanised top track
- 1000M Adjustable hangers
- 48/27B Guides
- 27S Steel guide channel with lugs
- 49 Door stop
- 210 Grab handle
- 1S Drop bolt

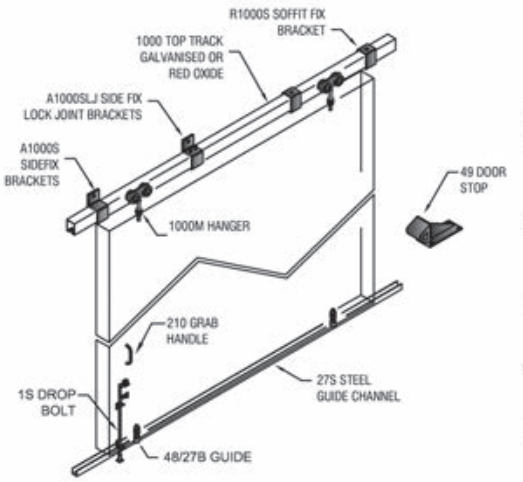

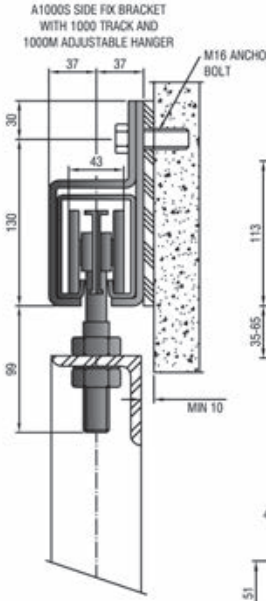

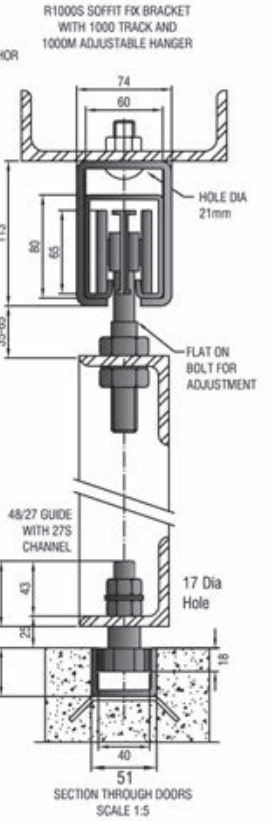

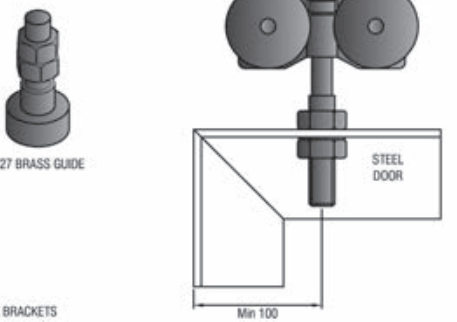

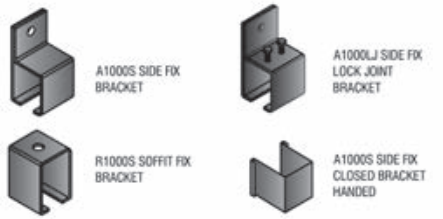

Mechanism

T			IND					ST 21.0

For specialist projects contact:

Hillaldam SLIDING DOOR SYSTEMS

South Africa: +27 11 626 1001
www.hillaldam.com

Straight sliding door systems
(Domestic, Commercial, Shop fitting, Hospital, Industrial)

Quick Cavity

Top hung sliding hardware for interior aluminium or timber doors up to 110kg sliding into DIY built in cavity.

Features

- Quality ball bearing hangers
- Slim line aluminium track
- Concealed guiding
- DIY Cavity system

Specifications

Max weight: 110kg
Width: 610-914mm
Max Height: 2030mm
Thickness: 25-45mm

The area of a single sliding leaf should be related to all other factors.

Components

- AJamb posts
- Wrench
- 3 Wheel ball bearing hangers
- Universal head
- #5x5/8 Screws
- Door Guides
- Jamb post foot brackets
- 5d Nails
- #10x1-1/4 Screw
- Rubber bumper

NOTE:
- All fittings available in stainless steel for coastal applications.
- Various finishes available.

For specialist projects contact:

Hillaldam
SLIDING DOOR SYSTEMS

South Africa: +27 11 626 1001
www.hillaldam.com

Straight sliding door systems
(Domestic, Commercial, Shop fitting, Hospital, Industrial)

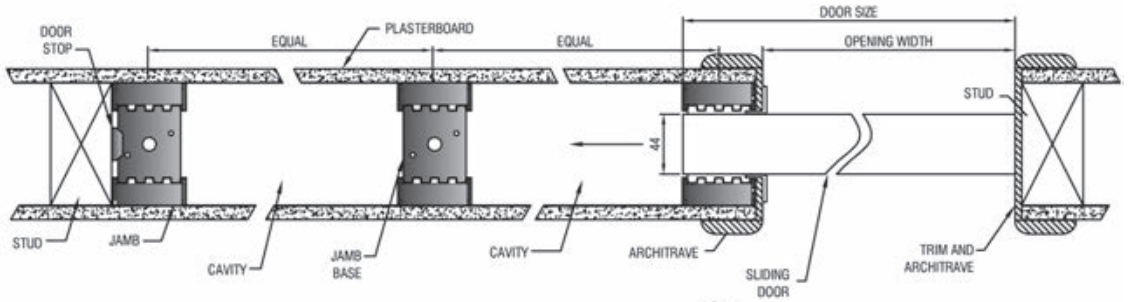

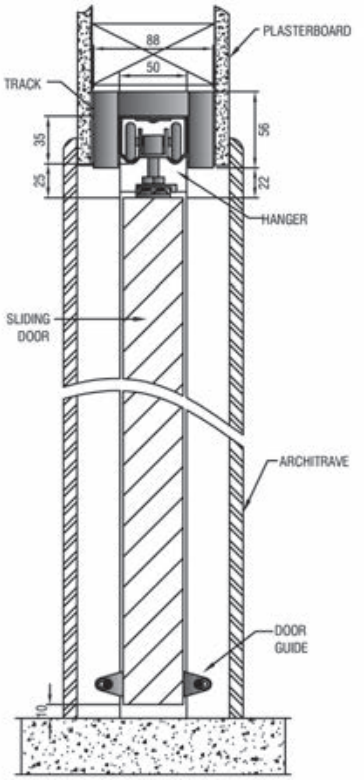

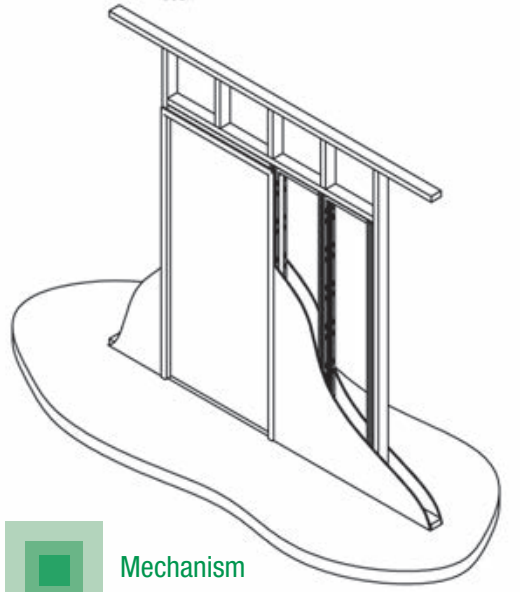

Mechanism

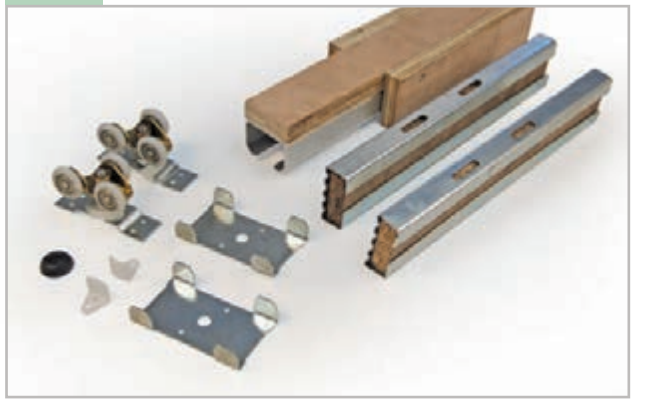

T	DOM							ST 22.0

G-Tech

The modern design sliding hardware system for frameless glass doors.

Features

- Stylish satin stainless steel fittings
- Smooth operation
- Secure fixing to glass

Specifications

Max door panel mass: 100kg
Max door panel height: 2500mm
Max door panel width: 1200mm
Glass: 10 - 12mm toughened

The area of a single sliding leaf should be related to all other factors.

Components

- GSD151 Track bracket for glass panel fixing
- GSD153 Track bracket for wall fixing
- GSD440 Track end bracket
- GSDREC Track end cap
- GSD025 Stainless steel tubular door track with end caps
- GSD423 Hangers
- GSD420 Door stop with spring
- BG15 Bottom guide
- CFH65 Flush handle
- 200B Grab door handle – 450mm or 750mm long

NOTE:
- Timber door hardware available.
- All fittings in satin stainless steel.

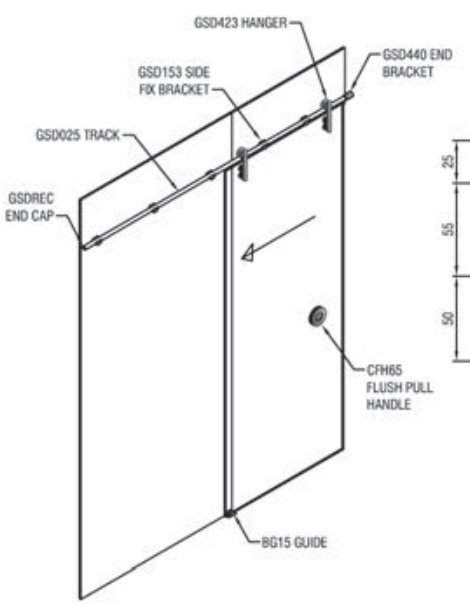

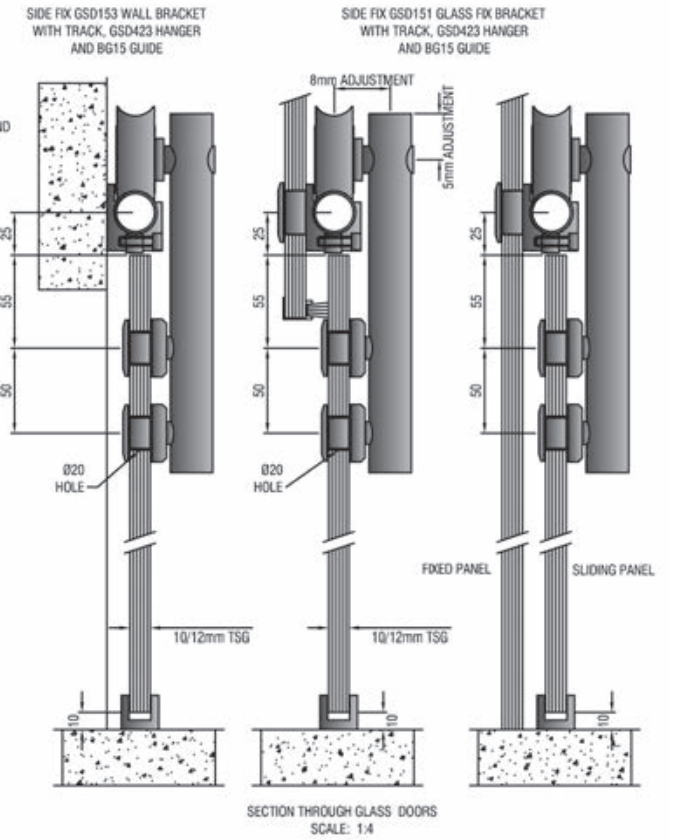

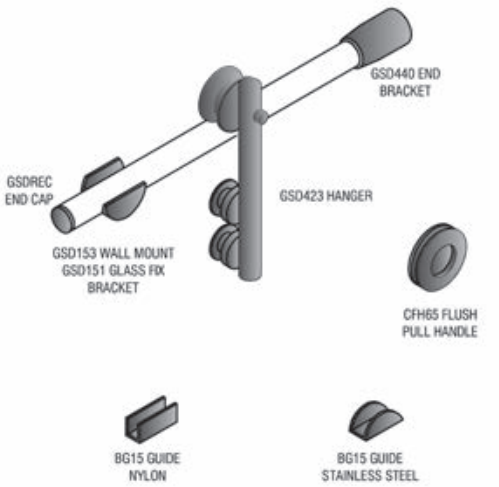

Mechanism

For specialist projects contact:

Hillaldam SLIDING DOOR SYSTEMS

South Africa: +27 11 626 1001
www.hillaldam.com

Straight sliding door systems
(Domestic, Commercial, Shop fitting, Hospital, Industrial)

T	DOM	COM		S/FIT	HOS	HOT		ST 23.1

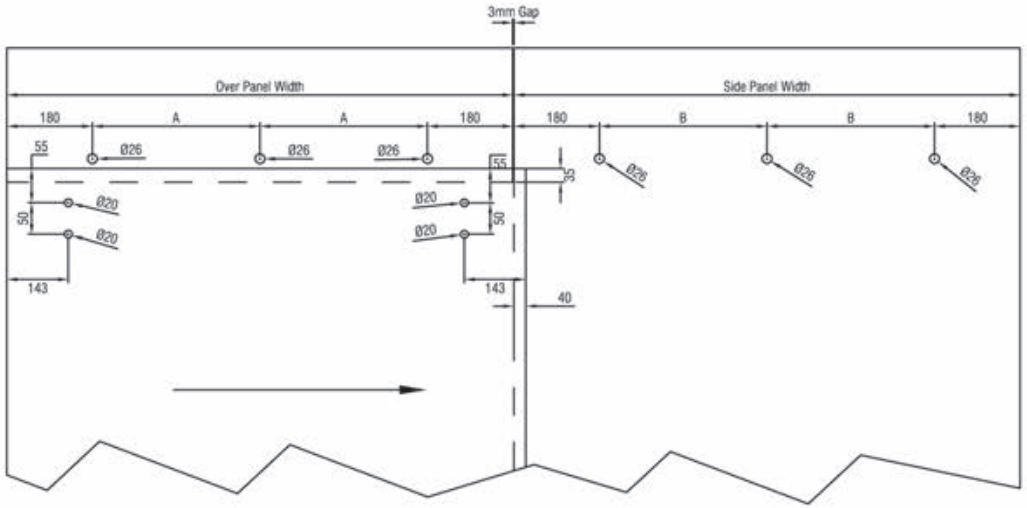

A = {OP - (180 + 180)} ÷ 2
B = {SP - (180 +180)} ÷ 2
DP = DOOR OPENING +40mm

OP - OVER PANEL WIDTH
SP - SIDE PANEL WIDTH
DP - DOOR PANEL WIDTH

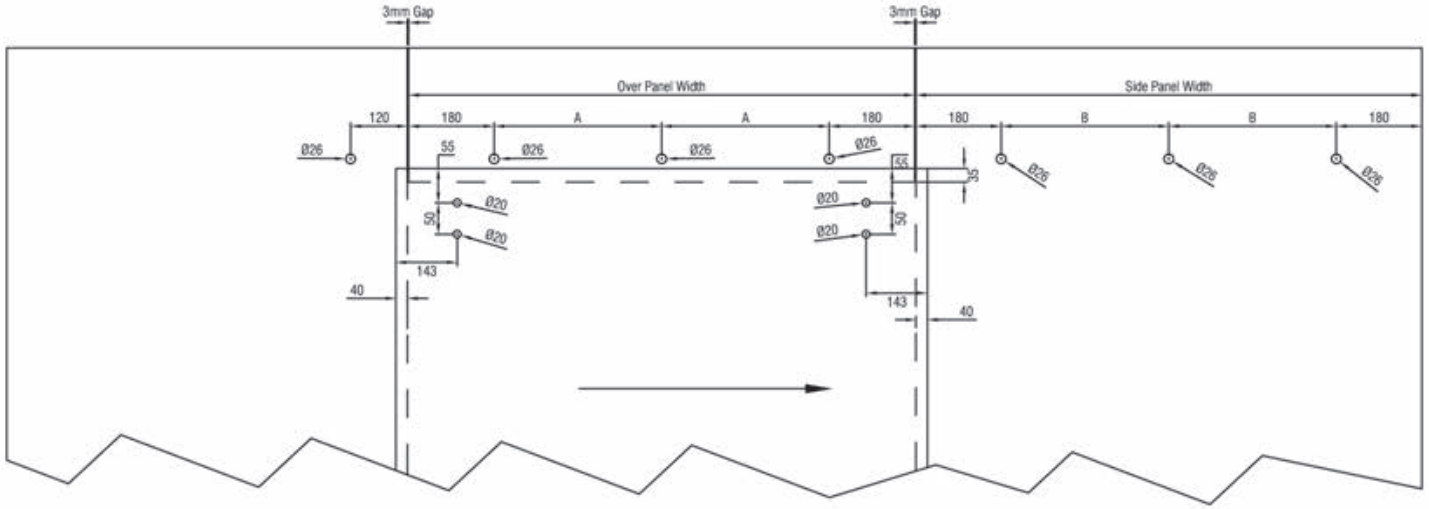

A = {OP - (180 + 180)} ÷ 2
B = {SP - (180 +180)} ÷ 2
DP = DOOR OPENING +2(40mm)

OP - OVER PANEL WIDTH
SP - SIDE PANEL WIDTH
DP - DOOR PANEL WIDTH

T	DOM	COM		S/FIT	HOS	HOT		ST 23.2

Strap 150

Top hung sliding hardware for industrial doors and sheds.

Features

- Reliable ball-bearing hangers
- Easy installation

Specifications

Max door mass: 150kg
Max door height: 2400mm
Max door width: 1200mm
Door construction: Steel framed or timber - min 44mm thick
For external applications, wind pressure must be taken into account when calculating maximum door mass.

The area of a single sliding leaf should be related to all other factors.

Components

- 43 Steel bar track with brackets (500mm centres)
- 43 Strap hangers
- 65 Stay roller (steel / nylon)
- 503NA/GA Flush pull handle
- 1S Drop bolt
- 40/19N Guide
- 19A Aluminium channel

NOTE:
- All fittings available in stainless steel for coastal applications.
- Various finishes available.

For specialist projects contact:

Hillaldam SLIDING DOOR SYSTEMS

South Africa: +27 11 626 1001
www.hillaldam.com

Straight sliding door systems
(Domestic, Commercial, Shop fitting, Hospital, Industrial)

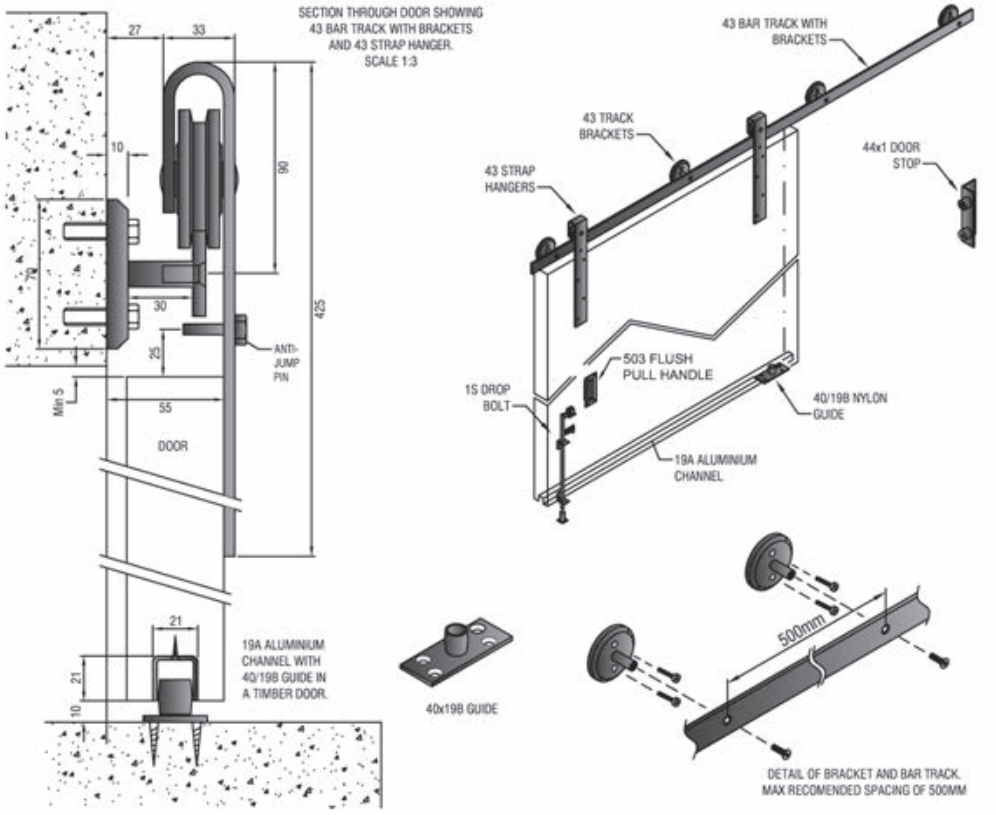

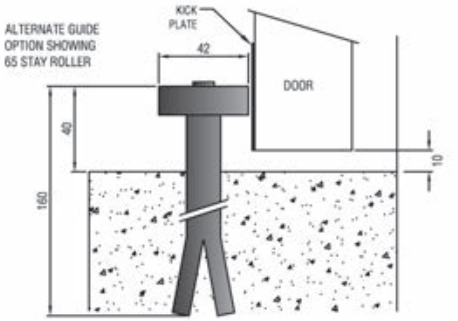

Mechanism

T	DOM		IND					ST 24.0

Strap 500

Top hung sliding hardware for industrial doors and sheds.

Features

- Reliable ball-bearing hangers
- Easy instalation

Specifications

Max door mass: 500kg
Max door height: 2700mm
Max door width: 2000mm
Door construction: Steel framed or timber - min 60mm thick
FOR EXPOSED DOORS, CONSIDER WIND PRESSURE.

The area of a single sliding leaf should be related to all other factors.

Components

- 200 Steel bar track with brackets
- 203 Strap hangers
- 65 Stay roller
- 210 Grab handle
- 1S drop bolt

Alternative guiding (refer Straightaway 100S and 100T)

- 40/19B Guides (timber door)
- 48/19B Guides (steel door)
- 19S Steel guide channel with lugs

NOTE:

- All fittings available in stainless steel for coastal applications.
- Various finishes available.

For specialist projects contact:

Hillaldam
SLIDING DOOR SYSTEMS

South Africa: +27 11 626 1001
www.hillaldam.com

Straight sliding door systems
(Domestic, Commercial, Shop fitting, Hospital, Industrial)

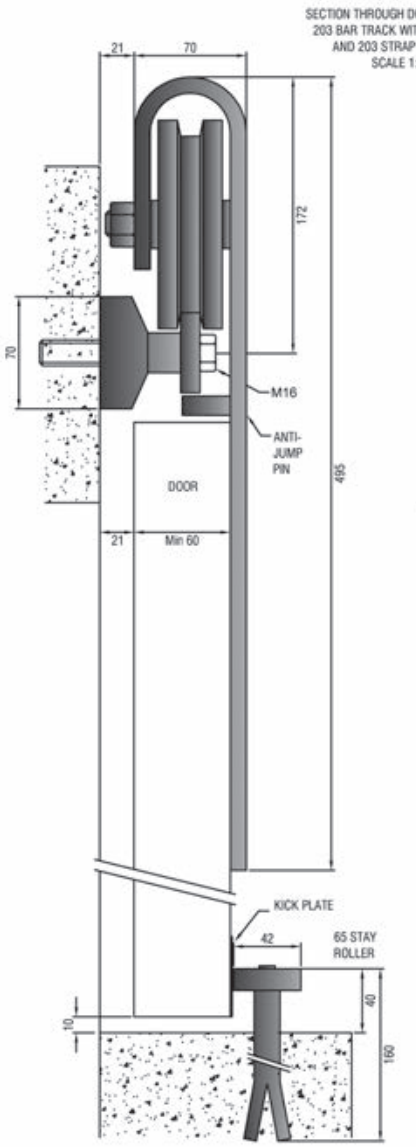

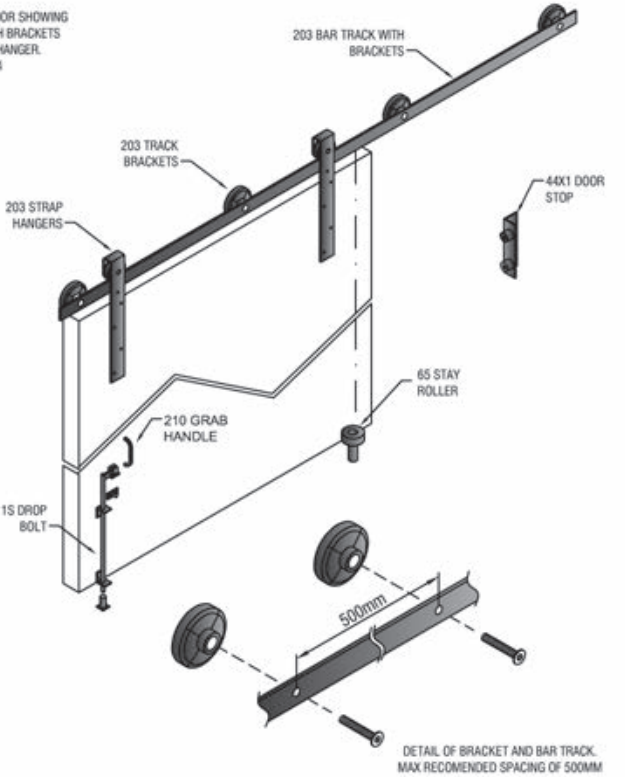

Mechanism

T	DOM		IND					ST 25.0

Rollaway 55

Bottom rolling sliding hardware for 55kg timber doors and cupboards.

Features

- Lightweight bottom rolling system
- Edge fixing guides

Specifications

Max door mass: 55kg
Max door height: 2100mm
Max door width: 1000mm
Door thickness: 40-44mm

The area of a single sliding leaf should be related to all other factors.

Components

- 21A Aluminium guide channel
- 89/21 Nylon top guides
- 87N Side fixing roller or 9410N Mortice fixing roller
- 814A or 815A Aluminium or 814LB Brass track
- 503NA/GA Flush pulll handle
- DS2 Door stop
- 965 Morticle claw lock

NOTE:
- Various finishes available.

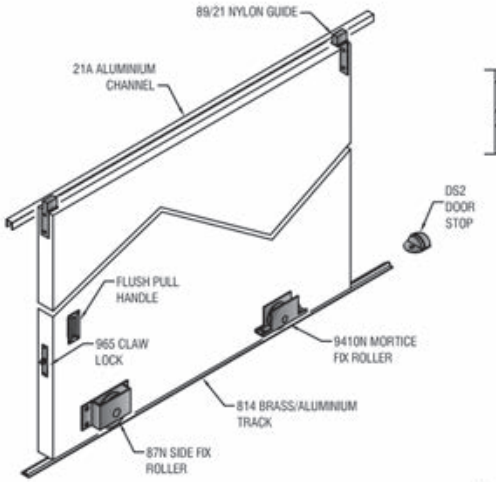

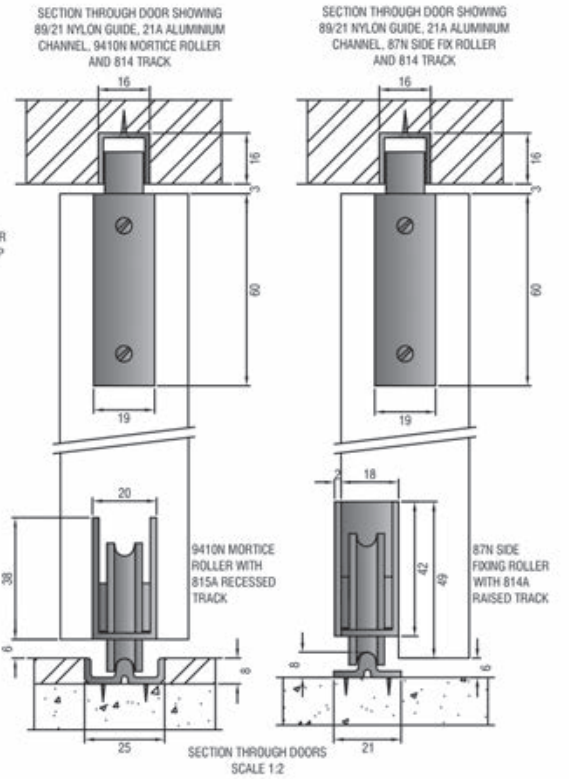

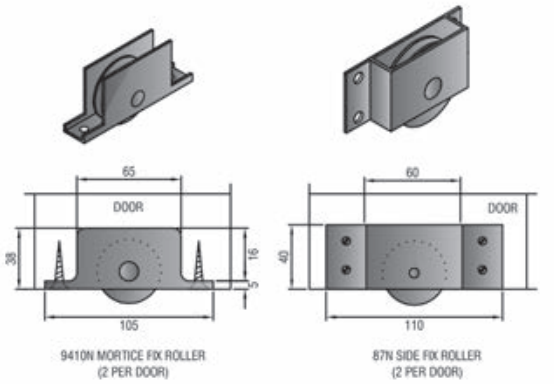

Mechanism

T	DOM				HOS	HOT		ST 26.0

For specialist projects contact:

Hillaldam SLIDING DOOR SYSTEMS

South Africa: +27 11 626 1001
www.hillaldam.com

Straight sliding door systems
(Domestic, Commercial, Shop fitting, Hospital, Industrial)

Rollaway 100T

Adjustable bottom rolling sliding door hardware for timber patio and shopfront doors.

Features

- Adjustable, self-aligning rollers
- Full stainless steel roller option

Specifications

Max door mass: 100kg
Max door height: 2100mm
Max door width: 1500mm
Door thickness: 44mm

The area of a single sliding leaf should be related to all other factors.

Components

- 19A Aluminium or 19B Brass guide channel
- 83/19 or 148/19 Top guides (rattle-proof) – gold or natural anodised
- 991T Bottom rollers
- 812A, 814A or 815 Aluminium or 815B or 814B Brass track
- 503NA/GA Flush pull handle
- 965 Morticle claw lock
- DS2 Floor stop
- 46LA Wall stop

NOTE:
- All fittings available in stainless steel for coastal applications.
- Various finishes available.

For specialist projects contact:

Hillaldam SLIDING DOOR SYSTEMS

South Africa: +27 11 626 1001
www.hillaldam.com

Straight sliding door systems
(Domestic, Commercial, Shop fitting, Hospital, Industrial)

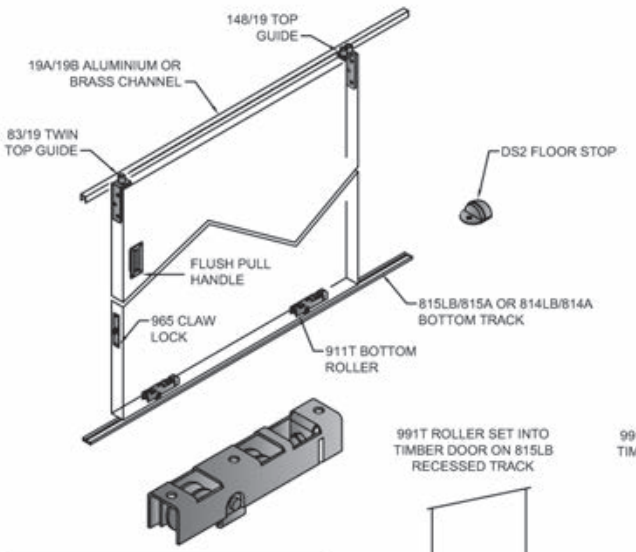

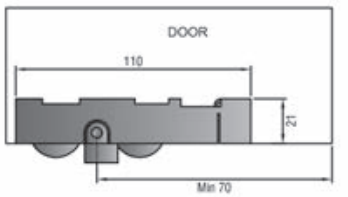

991T ADJUSTABLE BOTTOM ROLLER
(2 Rollers per door)

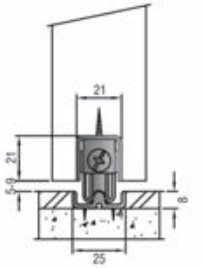

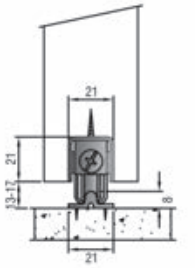

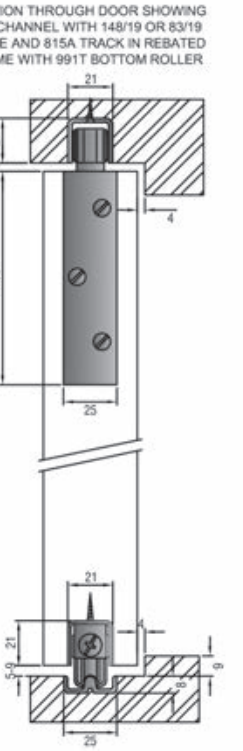

ALTERNATE CILL DETAILS
SCALE 1:3

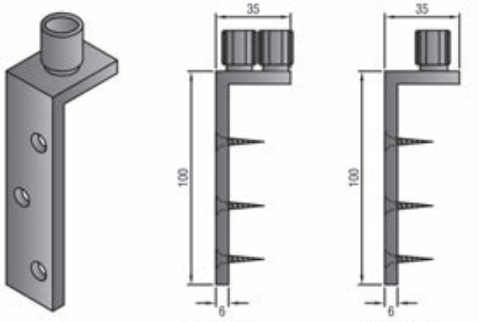

148/19 GUIDE
(2 Guides per door)

83/19 GUIDE
(2 Guides per door)

Mechanism

B	DOM	COM		S/FIT	HOS	HOT		ST 27.0

Rollaway 100A

Adjustable bottom rolling sliding door hardware for aluminium patio and shopfront doors.

Features

- Adjustable, self-aligning rollers
- Full stainless steel roller option

Specifications

Max door mass: 100kg
Max door height: 2100mm
Max door width: 1500mm
Door thickness: 44mm

The area of a single sliding leaf should be related to all other factors.

Components

- 19A Aluminium or 19B Brass guide channel
- 40/19N Top guide
- 991A Bottom rollers
- 812A, 814A or 815A Aluminium or
- 815B or 814B Brass track
- 503NA Flush pulll handle
- DS2 Floor stop
- 46LA Wall Stop

NOTE:
- All fittings available in stainless steel for coastal applications.
- Various finishes available.

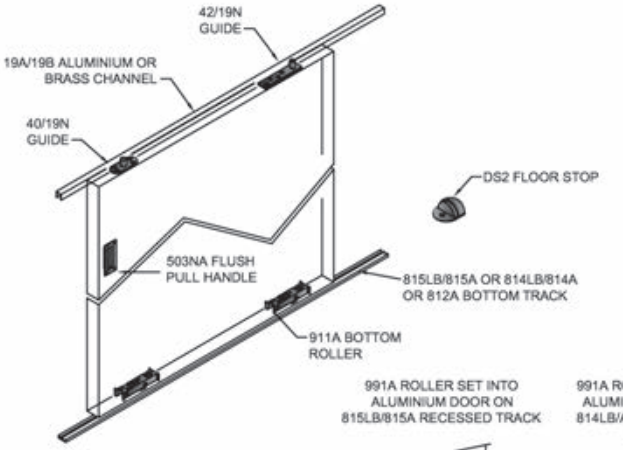

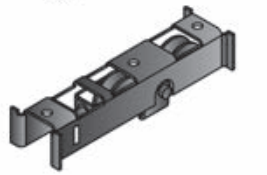

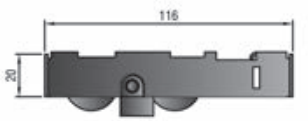

991A BOTTOM ROLLER

991A ROLLER SET INTO ALUMINIUM DOOR ON 815LB/815A RECESSED TRACK

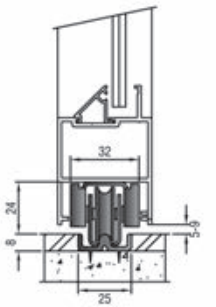

991A ROLLER SET INTO ALUMINIUM DOOR ON 814LB/A RAISED TRACK

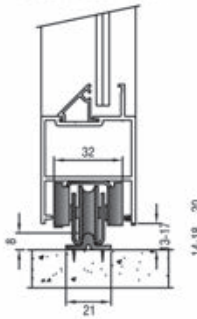

SECTION THROUGH DOOR SHOWING 19A CHANNEL WITH 40/19N AND 812A TRACK 991A BOTTOM ROLLER

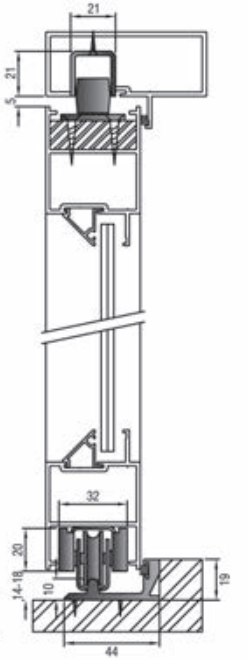

SECTION THROUGH DOOR
SCALE 1:3

40/19N TOP GUIDE

Mechanism

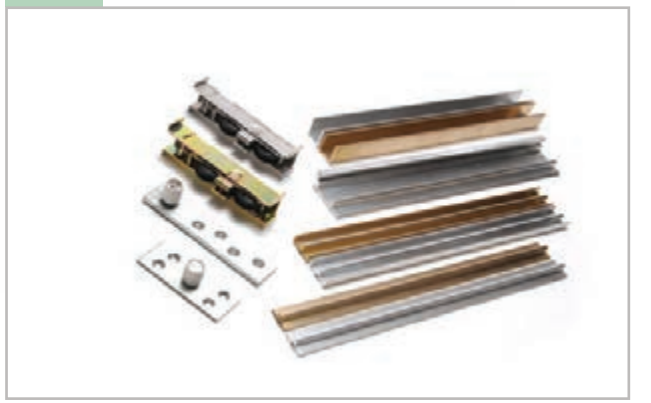

B	DOM	COM		S/FIT	HOS	HOT	W/R	ST 28.0

For specialist projects contact:

Hillaldam
SLIDING DOOR SYSTEMS

South Africa: +27 11 626 1001
www.hillaldam.com

Straight sliding door systems
(Domestic, Commercial, Shop fitting, Hospital, Industrial)

Rollaway 160

Bottom rolling sliding hardware for exterior timber doors up to 160kg.

Features

- Quality ball-bearing rollers
- Rattle-proof guide option

Specifications

Max door mass: 160kg
Max door height: 2400mm
Max door width: 1500mm
Door thickness: 44mm

The area of a single sliding leaf should be related to all other factors.

Components

- 19B Aluminium or 19B brass guide channel
- 83/19 or 148/19 Top guides (rattle-proof) – gold or natural anodised
- Finishes available (gold or natural anodised)
- 9410B Bottom rollers
- 814A or 815A Aluminium or
- 814B or 815B Brass track
- 503NA/GA Flush pull handle
- 965 Morticle claw lock
- DS2 Floor stop

NOTE:
- Various finishes available.

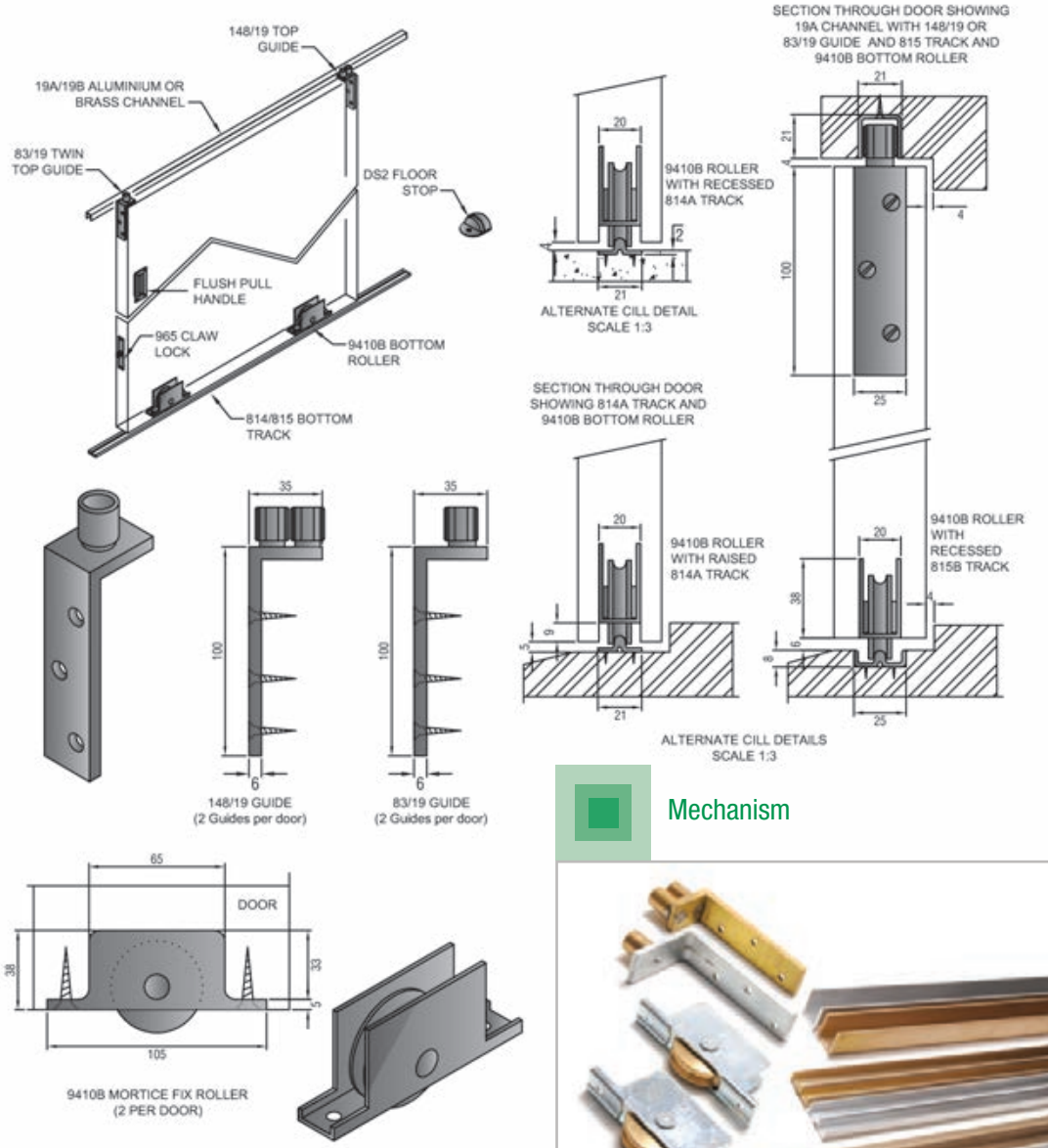

Mechanism

B	DOM	COM		S/FIT	HOS	HOT	W/R	ST 29.0

For specialist projects contact:

Hillaldam
SLIDING DOOR SYSTEMS

South Africa: +27 11 626 1001
www.hillaldam.com

Straight sliding door systems
(Domestic, Commercial, Shop fitting, Hospital, Industrial)

Rollaway 250S

Bottom rolling sliding hardware for steel doors up to 250kg.

Features

- Quality ball-bearing rollers
- Flat groove rollers for strength

Specifications

Max door mass: 250kg
Max door height: 3500mm
Max door width: 2000mm
Door thickness: Min 50mm
FOR EXPOSED DOORS,
CONSIDER WIND PRESSURE.
Max door surface area: 7 sq.m.

The area of a single sliding leaf should be related to all other factors.

Components

- A27S Brackets – max 900mm centres
- 27S Steel guide channel
- 48/27B Top guides
- 0826 Bottom rollers
- 408 Steel bottom track
- 1S Drop bolt
- 44x1 Door stop
- 210 Grab handle

NOTE:
- Various finishes available.

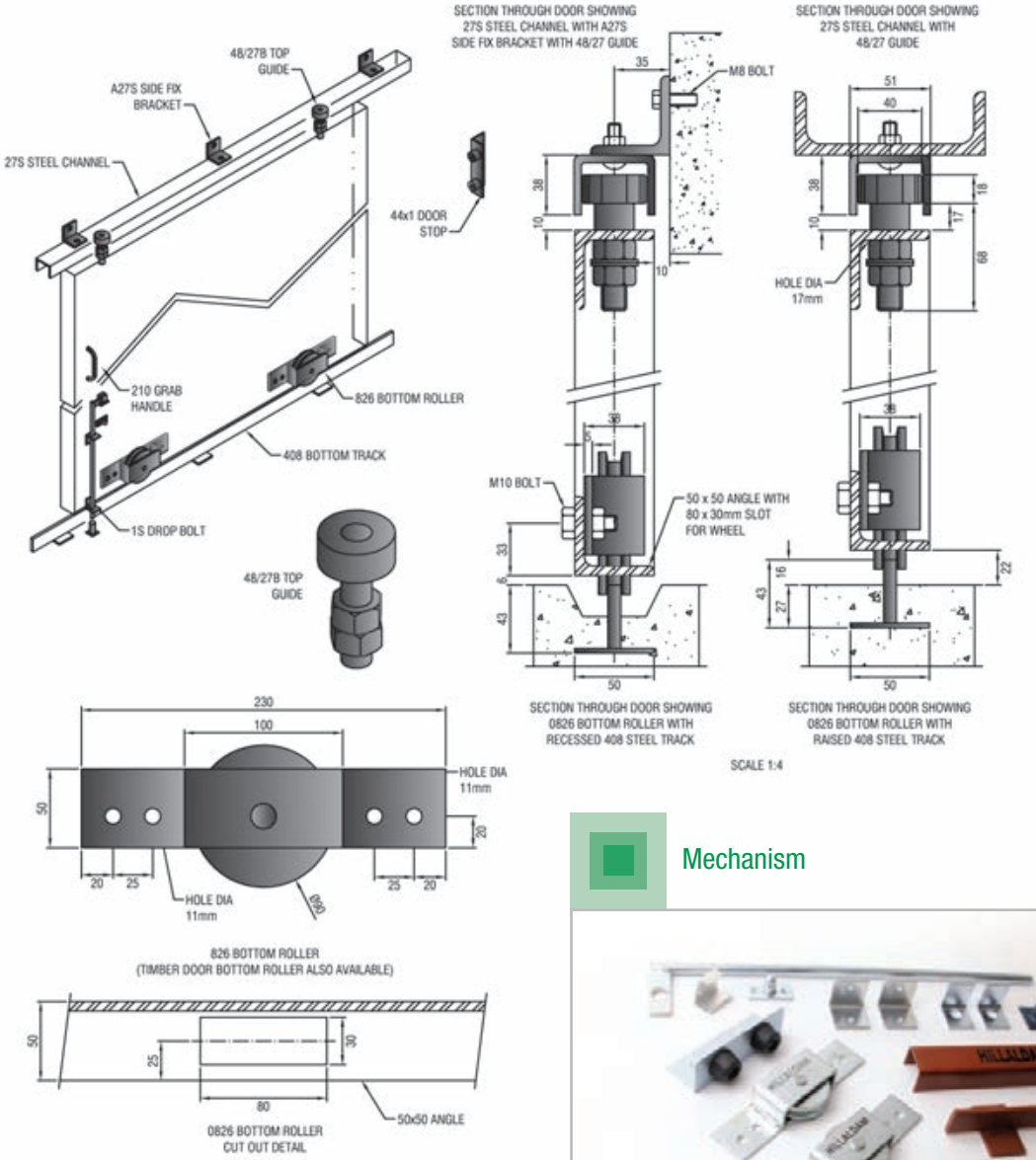

Mechanism

For specialist projects contact:

Hillaldam
SLIDING DOOR SYSTEMS

South Africa: +27 11 626 1001
www.hillaldam.com

Straight sliding door systems
(Domestic, Commercial, Shop fitting, Hospital, Industrial)

B			IND					ST 30.0

Rollaway 250B

Bottom rolling sliding hardware for exterior timber doors up to 250kg.

Features

- Quality ball-bearing rollers
- Rattle-proof guide option

Specifications

Max door mass: 250kg
Max door height: 2700mm
Max door width: 1500mm
Door thickness: 44mm

The area of a single sliding leaf should be related to all other factors.

Components

- 19A aluminium or 19B Brass guide channel
- 83/19 or 148/19 Top guides (rattle-proof) – gold or natural anodised
- 94NB Bottom rollers
- 814B or 815B Brass track
- 503NA/GA Flush pull handle
- 965 Morticle claw lock
- DS2 Floor stop

NOTE:
- All fittings available in stainless steel for coastal applications.
- Various finishes available.

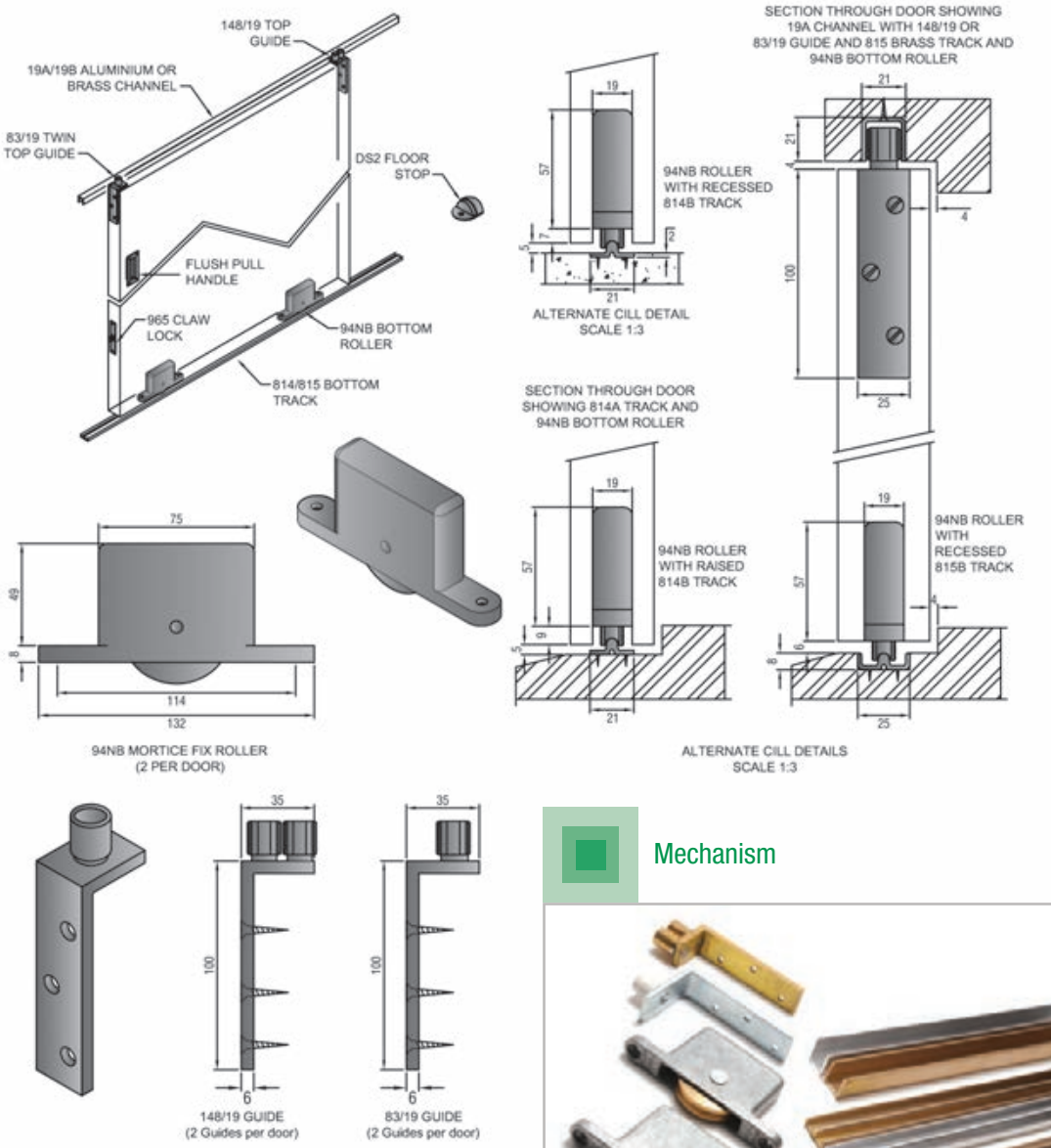

Mechanism

B	DOM	COM		S/FIT	HOS	HOT	W/R	ST 31.0

For specialist projects contact:

Hillaldam SLIDING DOOR SYSTEMS

South Africa: +27 11 626 1001
www.hillaldam.com

Straight sliding door systems
(Domestic, Commercial, Shop fitting, Hospital, Industrial)

Rollaway 250N

Adjustable bottom rolling sliding door hardware for aluminium patio and shopfront doors up to 250kg.

Features

- Nylon rollers with double bearings
- Full aluminium body and stainless steel axil

Specifications

Max door mass: 250kg
Max door height: 3000mm
Max door width: 2000mm
Door thickness: 44mm

The area of a single sliding leaf should be related to all other factors.

Components

- 19A Aluminium or 19B Brass guide channel
- 40/19N Top guides
- 802A Aluminium channel
- 805/805DR Top guide
- 992 Bottom rollers
- 814B or 815B Brass bottom track
- 503NA Flush handle
- DS2 Floor stop
- 46LA Wall stop

NOTE:
- All fittings available in stainless steel for coastal applications.
- Various finishes available.

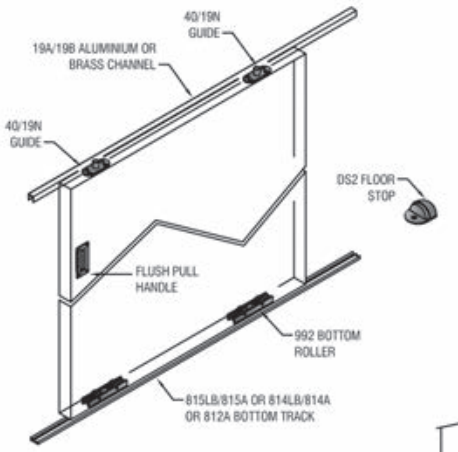

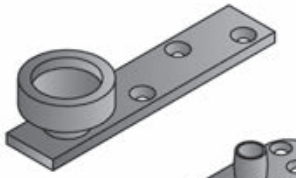

805 MOD GUIDE

40/19N TOP GUIDE

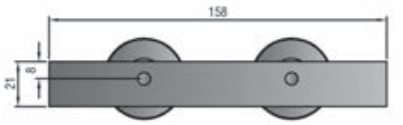

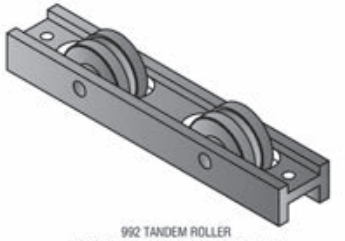

992 TANDEM ROLLER
(OFFSET ROLLER ALLOWS ADJUSTMENT)

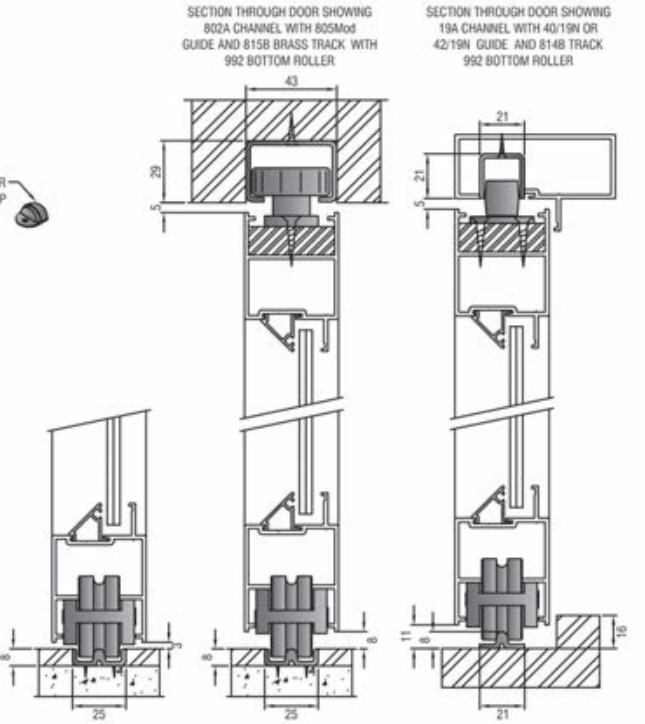

SECTION THROUGH DOOR
SHOWING 815B AND 814B BRASS TRACK AND ROLLER ADJUSTMENT
SCALE 1:3

Mechanism

B	DOM	COM		S/FIT	HOS	HOT	W/R	ST 32.0

For specialist projects contact:

Hillaldam
SLIDING DOOR SYSTEMS

South Africa: +27 11 626 1001
www.hillaldam.com

Straight sliding door systems
(Domestic, Commercial, Shop fitting, Hospital, Industrial)

Rollaway 400

Bottom rolling sliding hardware for exterior timber doors up to 400kg.

Features

- Quality ball-bearing rollers
- Flat track tread for strength

Specifications

Max door mass: 400kg
Max door height: 3500mm
Max door width: 2000mm
Door thickness: 44-60mm

The area of a single sliding leaf should be related to all other factors.

Components

- 802A Aluminium channel
- 805/805DR Top guides
- 98B Bottom roller (brass wheel) or 98S Bottom roller (steel wheel)
- 821BH Brass bottom track or 408S Steel bottom track
- 503NA/GA Flush pull handle
- 965 Morticle claw lock
- DS2 Floor stop

NOTE:
- All fittings available in stainless steel for coastal applications.
- Various finishes available.

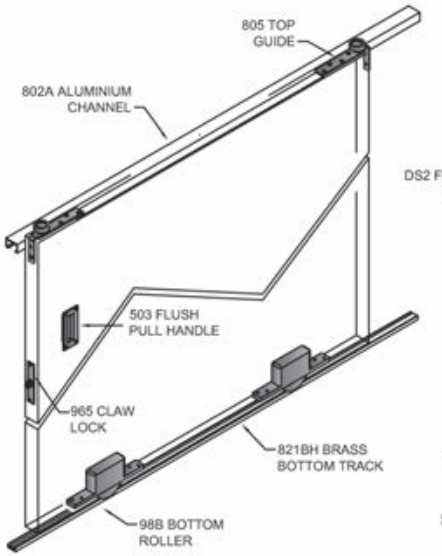

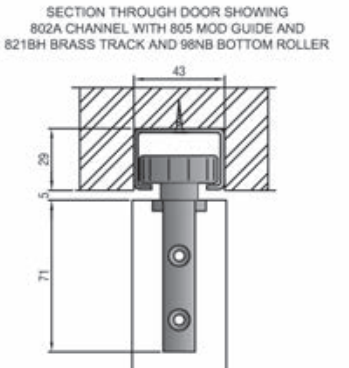

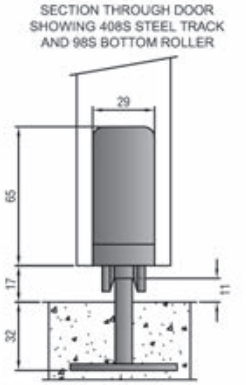

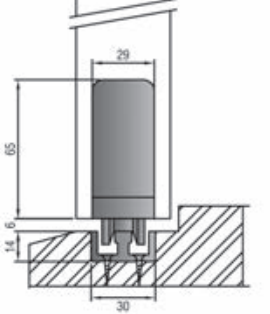

ALTERNATE CILL DETAILS
SCALE 1:3

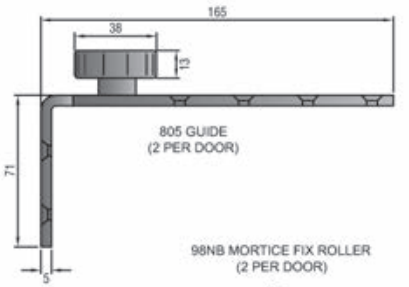

805 GUIDE
(2 PER DOOR)

98NB MORTICE FIX ROLLER
(2 PER DOOR)

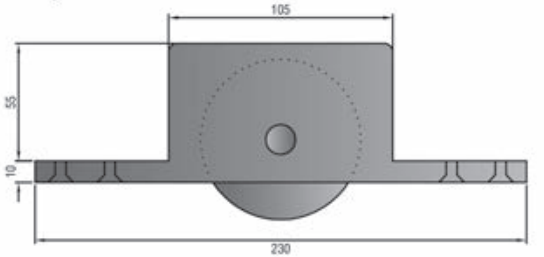

Mechanism

B	DOM	COM	IND	S/FIT	HOS	HOT	W/R	ST 33.0

For specialist projects contact:

Hillaldam
SLIDING DOOR SYSTEMS

South Africa: +27 11 626 1001
www.hillaldam.com

Straight sliding door systems
(Domestic, Commercial, Shop fitting, Hospital, Industrial)

Rollaway 500

Bottom rolling sliding hardware for steel and timber doors up to 500kg.

Features

- Quality ball-bearing rollers
- Flat groove rollers for strength

Specifications

Max door mass: 500kg
Max door height: 4000mm
Max door width: 3000mm
Door thickness: 50-65mm
FOR EXPOSED DOORS,
CONSIDER WIND PRESSURE.
Max door area: 12 sq.m.

The area of a single sliding leaf should be related to all other factors.

Components

- A810S (side) or R810S (top) brackets
  – max 900mm centres
- 810S Steel guide channel
- 0831 Top guides
- 0828 Bottom rollers
- 5012 Steel bottom track
- 1S Drop bolt
- 44x1 Door stop
- 210 Grab handle

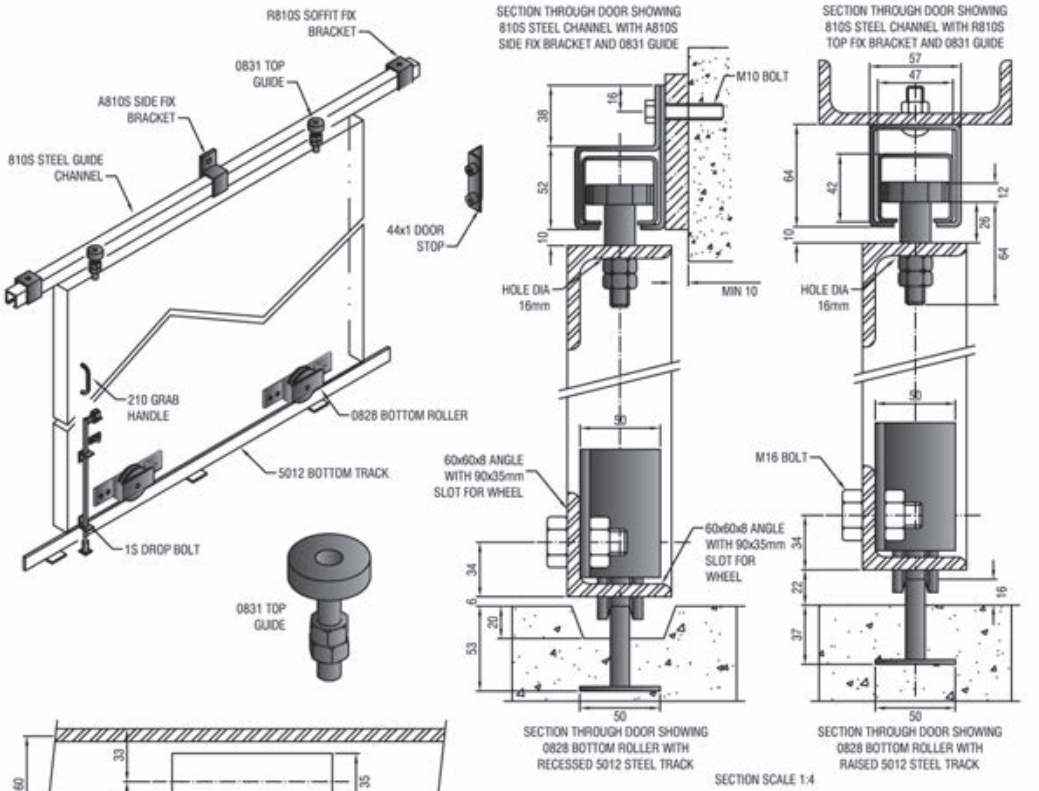

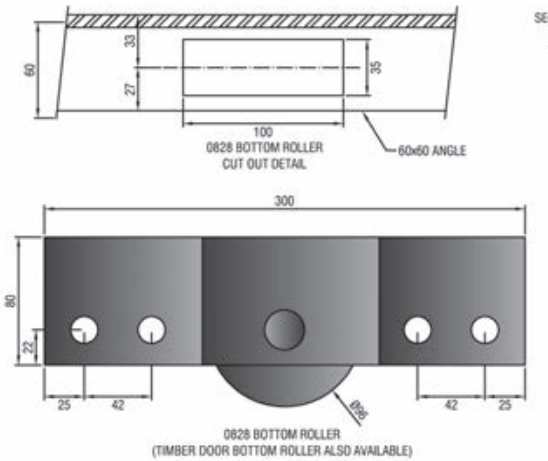

Mechanism

For specialist projects contact:

Hillaldam SLIDING DOOR SYSTEMS

South Africa: +27 11 626 1001
www.hillaldam.com

Straight sliding door systems
(Domestic, Commercial, Shop fitting, Hospital, Industrial)

B			IND					ST 34.0

Rollaway 1000

Bottom rolling sliding hardware for steel and timber doors up to 1000kg.

Features

- Quality ball-bearing rollers
- Flat groove rollers for strength

Specifications

Max door mass: 1000kg
Max door height: 5000mm
Max door width: 4000mm
Door thickness: 65mm
FOR EXPOSED DOORS,
CONSIDER WIND PRESSURE.
Max door surface area: 20 sq.m.

The area of a single sliding leaf should be related to all other factors.

Components

- A417S (side) or R417S (top) brackets – max 900mm centres
- 417S Steel guide channel
- 0846 Top guide
- 0832 Bottom rollers
- 5020 Steel bottom track
- 1S Drop bolt
- 49 Door stop
- 210 Grab handle

For specialist projects contact:

Hillaldam
SLIDING DOOR SYSTEMS

South Africa: +27 11 626 1001
www.hillaldam.com

Straight sliding door systems
(Domestic, Commercial, Shop fitting, Hospital, Industrial)

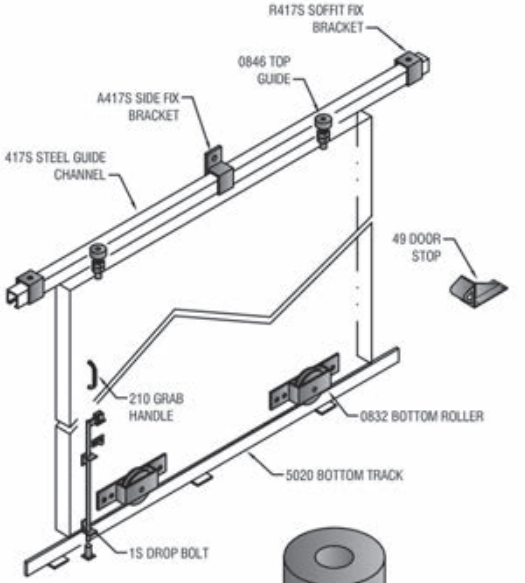

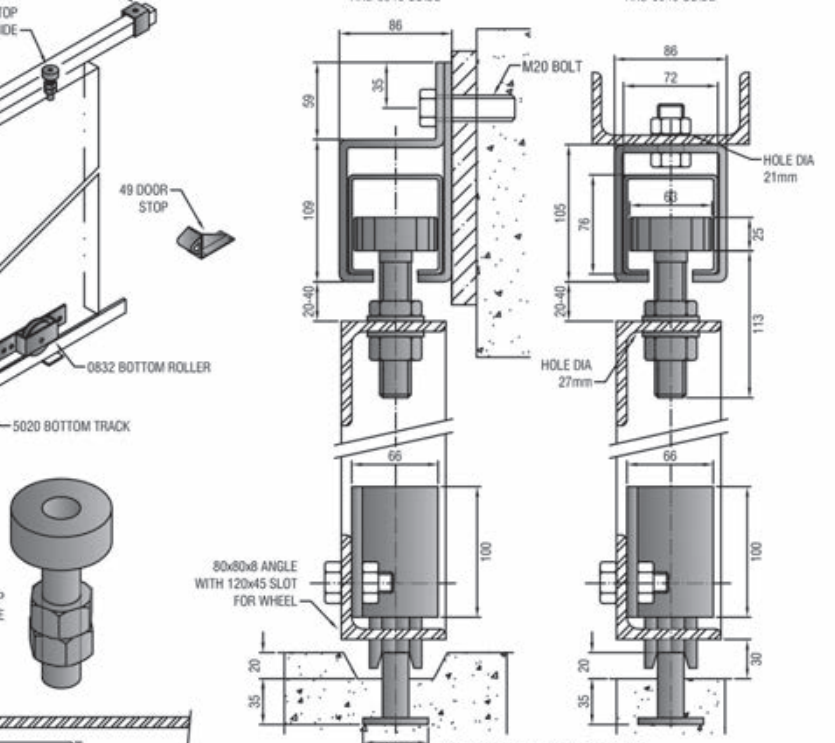

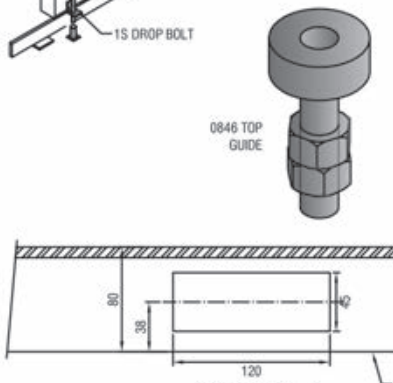

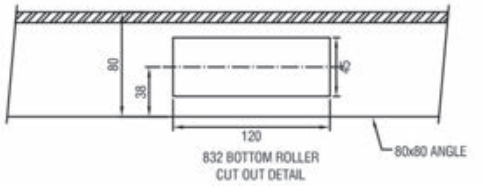

832 BOTTOM ROLLER
CUT OUT DETAIL

SECTION THROUGH DOOR SHOWING
ALTERNATE CILL DETAILS OF 0832 BOTTOM ROLLER
WITH RAISED AND RECESSED 5012 STEEL TRACK
SCALE 1:5

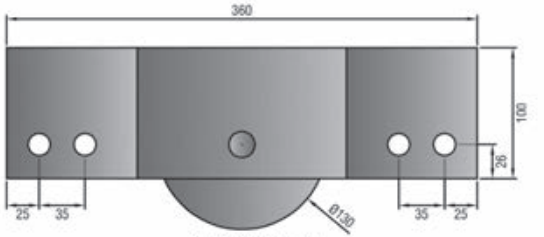

0832 BOTTOM ROLLER
(TIMBER DOOR BOTTOM ROLLER ALSO AVAILABLE)
SCALE 1:5

Mechanism

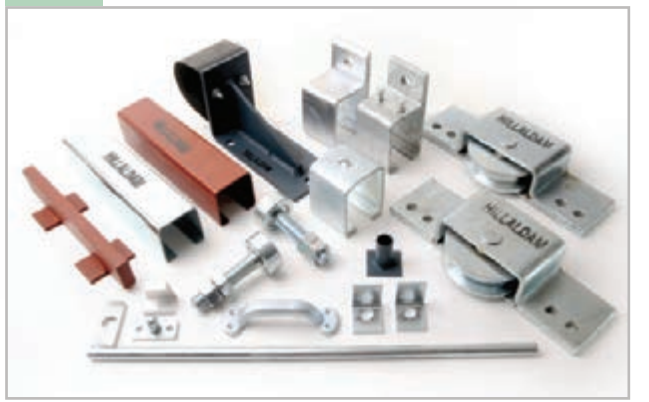

B			IND					ST 35.0

Rollaway 2000

Bottom rolling sliding hardware for steel doors up to 2000kg.

Features

- Quality ball-bearing rollers
- Flat groove rollers for strength

Specifications

Max door mass: 2000kg
Max door height: 6000mm
Max door width: 5000mm
Door thickness: 75-150mm
FOR EXPOSED DOORS,
CONSIDER WIND PRESSURE.
Max door surface area: 30 sq.m.

The area of a single sliding leaf should be related to all other factors.

Components

- A417S (side) or R417S (top) brackets – max 900mm centres
- 417S Steel guide channel
- 846 Top guides
- 843 Bottom rollers
- 100/25 Steel bottom track
- 49 Door stop
- 210 Grab handle
- 1S Drop bolt

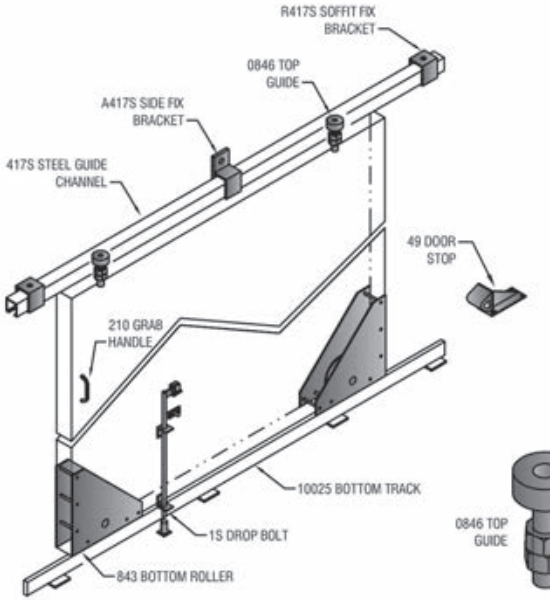

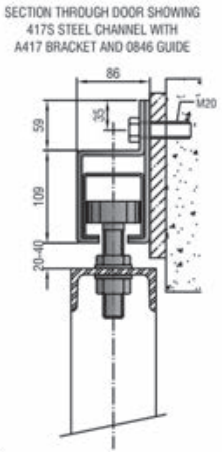

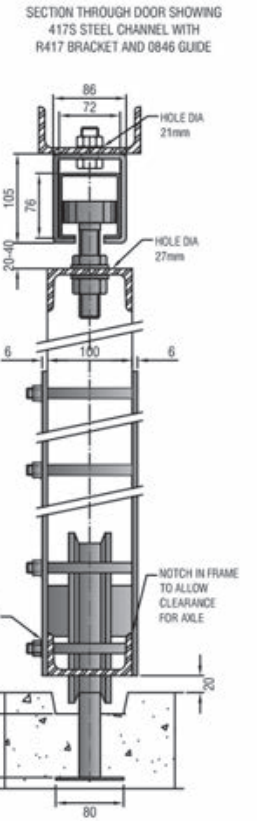

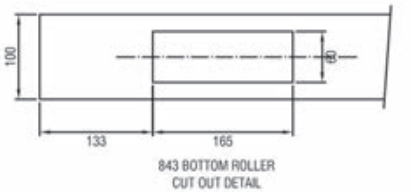

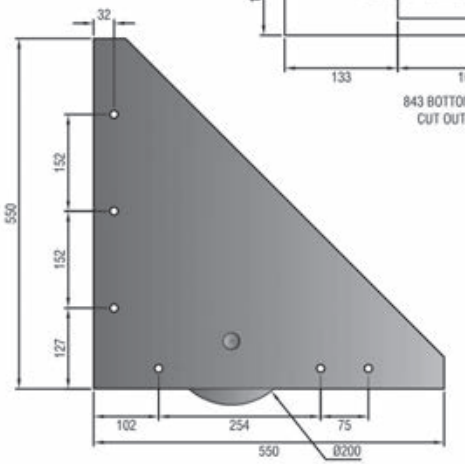

Mechanism

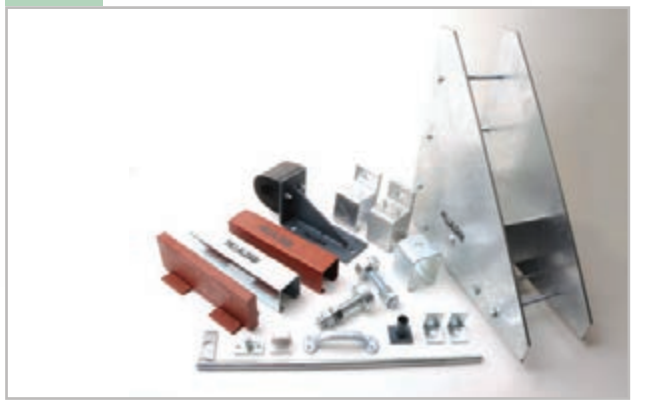

For specialist projects contact:

Hillaldam
SLIDING DOOR SYSTEMS

South Africa: +27 11 626 1001
www.hillaldam.com

Straight sliding door systems
(Domestic, Commercial, Shop fitting, Hospital, Industrial)

B			IND					ST 36.0

Rollaway 4000

Bottom rolling sliding hardware for steel doors up to 4000kg.

Features

- Quality heavy duty hardware
- Hand crank for easy operation

Specifications

Max door mass: 4000kg
Max door height: 10000mm
Max door width: 6000mm
Door thickness: Min 220mm
FOR EXPOSED DOORS,
CONSIDER WIND PRESSURE.
Max door surface area: 60 sq.m.

The area of a single sliding leaf should be related to all other factors.

Components

- 9150 Top guides
- Top guide channel by others
- 9101D Idler bottom rollers
- 910CR Cranked bottom rollers
- 91S Steel bottom track
- 49 Door stop
- 1S Drop bolt

NOTE:

- Rollers for heavier/larger doors custom designed up to 20 000kg.

For specialist projects contact:

Hillaldam
SLIDING DOOR SYSTEMS

South Africa: +27 11 626 1001
www.hillaldam.com

Straight sliding door systems
(Domestic, Commercial, Shop fitting, Hospital, Industrial)

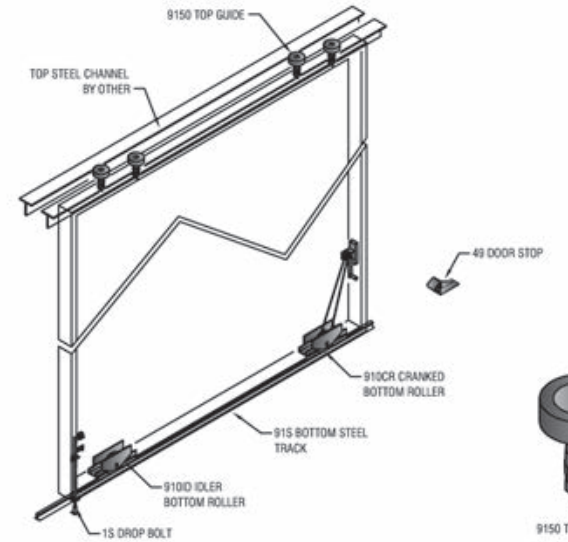

PLAN DETAIL OF DOOR SHOWING STAGGERED POSITION OF 9150 TOP GUIDES

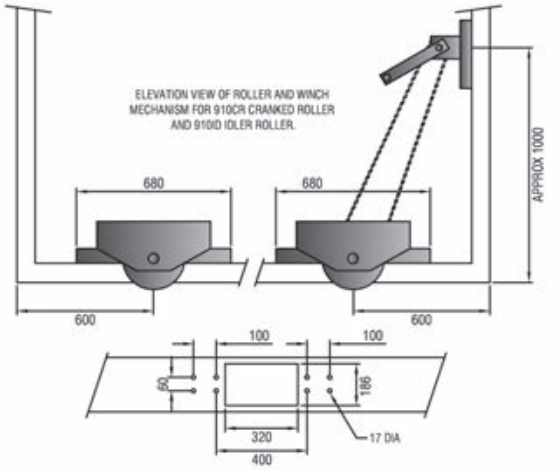

910 BOTTOM ROLLER DOOR CHANNEL CUT OUT DETAIL FOR ROLLER WHEEL

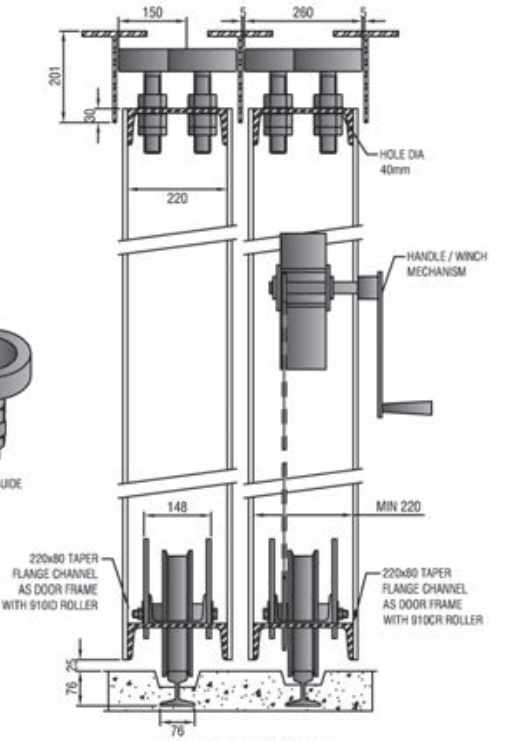

SECTION THROUGH DOOR SHOWING 910ID IDLER ROLLER AND 910CR CRANKED ROLLER ON 91S BOTTOM STEEL TRACK. SCALE 1:15

Mechanism

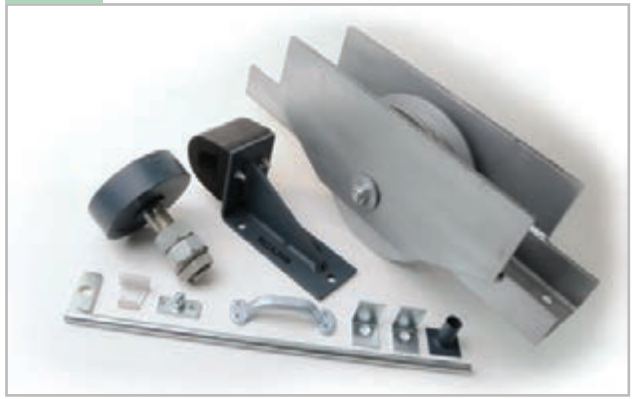

B			IND					ST 37.0

Sliding Folding Systems

Foldaside 40

Top hung sliding and folding hardware for interior aluminium and timber doors.

Features

- Strong aluminium top track
- End hung leaves
- Quality proven hardware
- End pivot for equal leaves

Specifications

Max leaf mass: 40kg
Max leaf height: 2400mm
Max leaf width: 900mm
Leaf thickness: 44mm
Max 5 leaves hinged together, folding either way.

The area of a single sliding leaf should be related to all other factors.

Components

- 200P Pivot set
- 200TA Aluminium top track
- 200FA/FT Hangers
- 19A Aluminium or 19B brass guide channel
- 200/19N Bottom guide
- 443B Brass or 443A aluminium hinges
- 868x1 Aluminium door or 866x1 timber door hinge
- VSKH Aluminium door or 86SKH timber door hinge handle
- 503NA/GA Flush pull handle
- 452 Holdback catch
- 455 Roller catch
- 488x150 Flush bolt (timber doors)
- 477LF Single or 477 Double throw flush bolt (aluminium doors)
- 970 Deadbolt lock (timber doors)

NOTE:

- When pivot sets are replaced by hinges, particular attention should be paid by the joiner or aluminium fabricator to leaf sizes.
- All fittings available in stainless steel for all coastal applications.
- Various finishes available.

For specialist projects contact:

Hillaldam
SLIDING DOOR SYSTEMS

South Africa: +27 11 626 1001
www.hillaldam.com

Sliding / folding door systems
(Domestic, Commercial, Shop fitting, Hospital, Industrial)

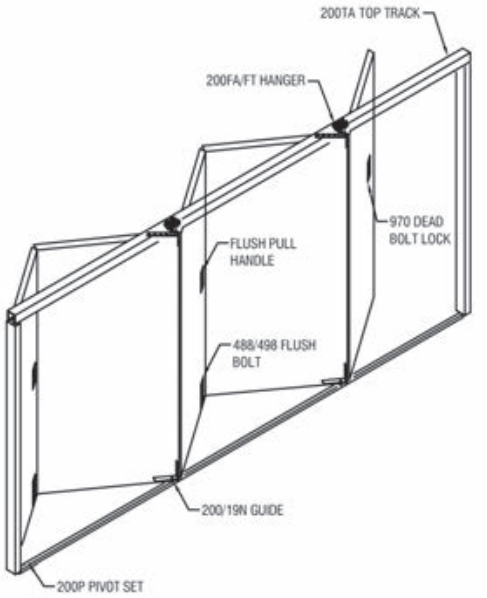

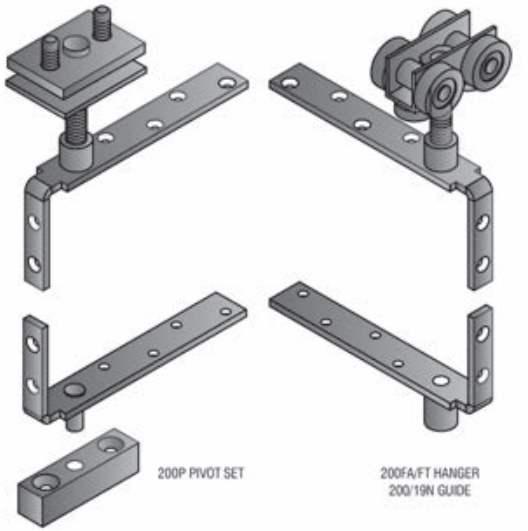

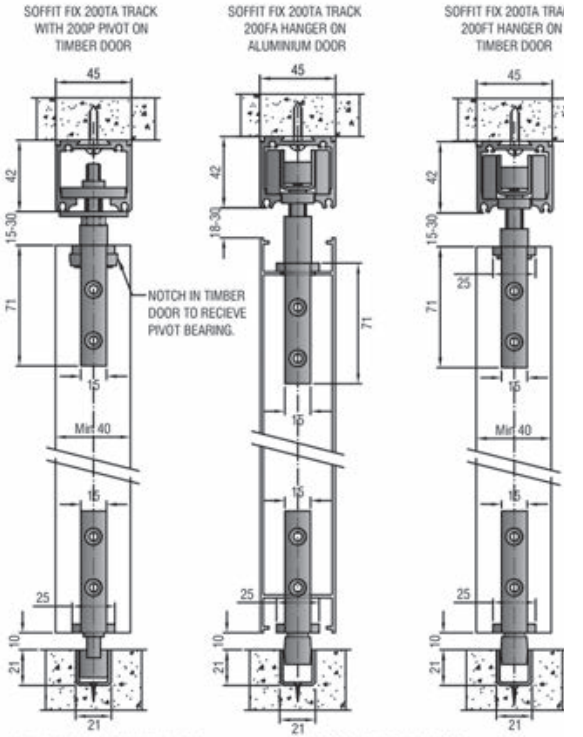

Mechanism

B	DOM	COM			HOS	HOT		SF 1.1

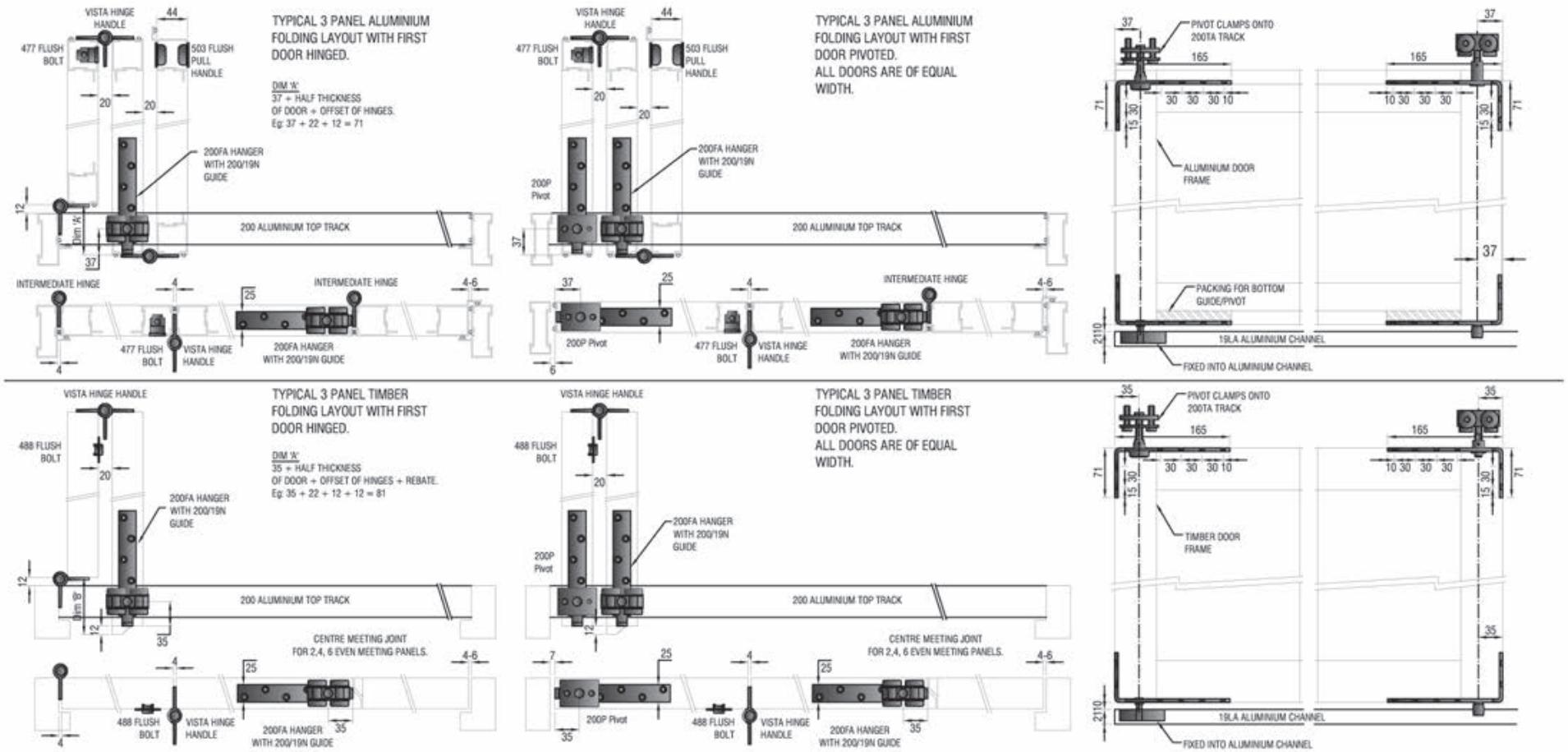

B	DOM	COM			HOS	HOT		SF 1.2

Hillaldam SLIDING DOOR SYSTEMS
South Africa: +27 11 626 1001
www.hillaldam.com

Foldaside 40

Foldaside 60

Top hung sliding and folding hardware for interior aluminium and timber doors.

Features

- Strong aluminium top track
- End hung leaves
- Quality proven hardware
- End pivot for equal leaves

Specifications

Max leaf mass: 60kg
Max leaf height: 2700mm
Max leaf width: 900mm
Leaf thickness: 44mm
Max 5 leaves hinged together, folding either way.

The area of a single sliding leaf should be related to all other factors.

Components

- 400P Pivot set
- 400TA Aluminium top track
- 400FT/400FA Hangers
- 19A Aluminium or 19B brass guide channel
- 400/19N Bottom guide
- 443B Brass or 443A aluminium hinges
- 868x1 Aluminium door or 866x1 timber door hinge
- VSKH Aluminium door or 86SKH timber door hinge handle
- 503NA/GA Flush pull handle
- 452 Holdback catch
- 455 Roller catch
- 488x150 Flush bolt (timber doors)
- 477LF Single or 477FR Double throw flush bolt (aluminium doors)
- 970 Deadbolt lock (timber doors)

NOTE:

- When pivot sets are replaced by hinges, particular attention should be paid by the joiner or aluminium fabricator to leaf sizes.
- All fittings available in stainless steel for all coastal applications.
- Various finishes available.

For specialist projects contact:

Hillaldam
SLIDING DOOR SYSTEMS

South Africa: +27 11 626 1001
www.hillaldam.com

Sliding / folding door systems
(Domestic, Commercial, Shop fitting, Hospital, Industrial)

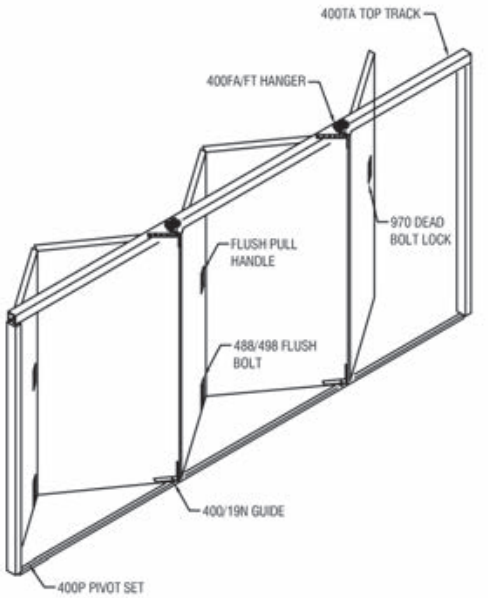

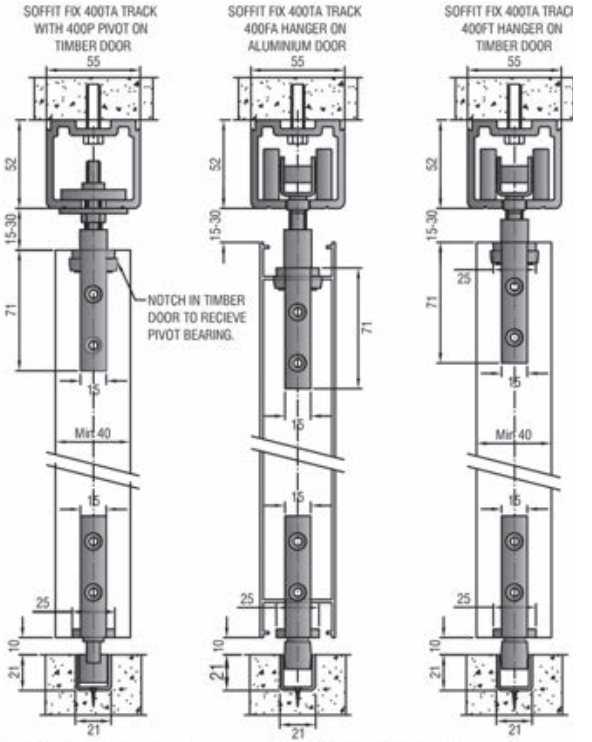

19LA ALUMINIUM CHANNEL IN THE FLOOR WITH 400P PIVOT
SECTION SCALE: 1:4

SECTION THROUGH DOORS
19LA ALUMINIUM CHANNEL IN THE FLOOR WITH 400/19N GUIDE.
SECTION SCALE: 1:4

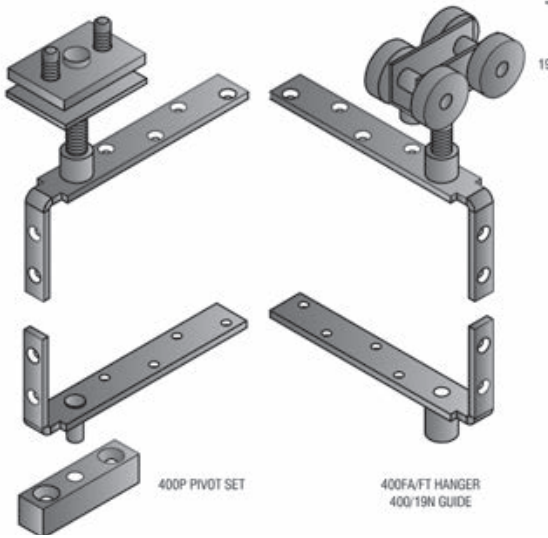

Mechanism

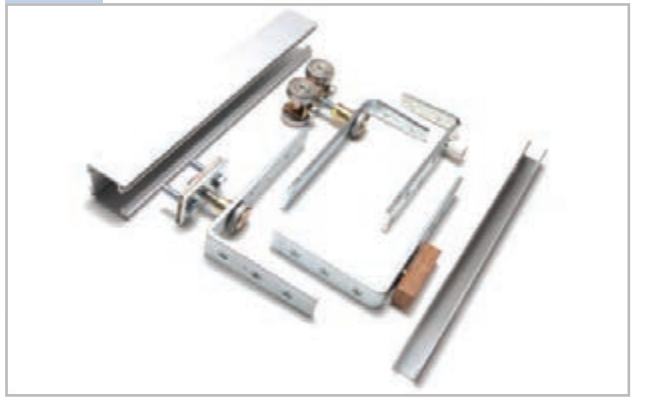

B	DOM	COM		S/FIT	HOS	HOT		SF 2.1

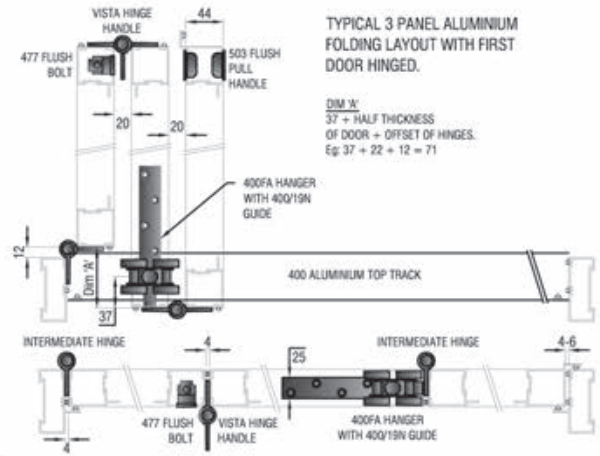

TYPICAL 3 PANEL ALUMINIUM FOLDING LAYOUT WITH FIRST DOOR HINGED.

DIM 'A'
37 + HALF THICKNESS OF DOOR + OFFSET OF HINGES.
Eg: 37 + 22 + 12 = 71

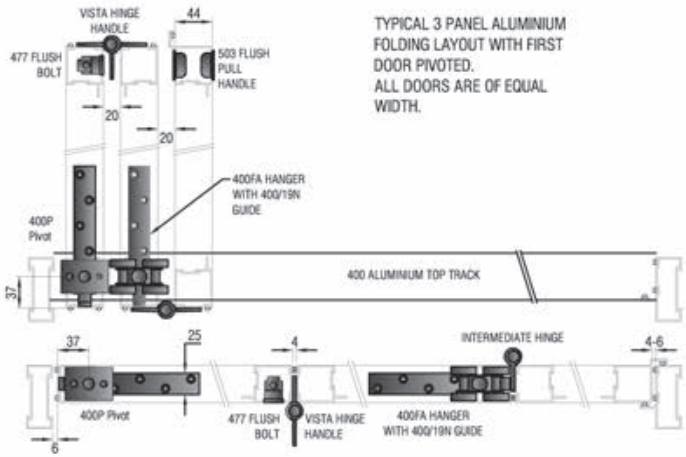

TYPICAL 3 PANEL ALUMINIUM FOLDING LAYOUT WITH FIRST DOOR PIVOTED.
ALL DOORS ARE OF EQUAL WIDTH.

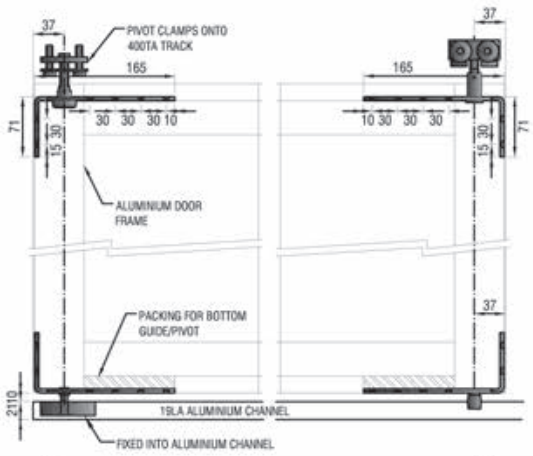

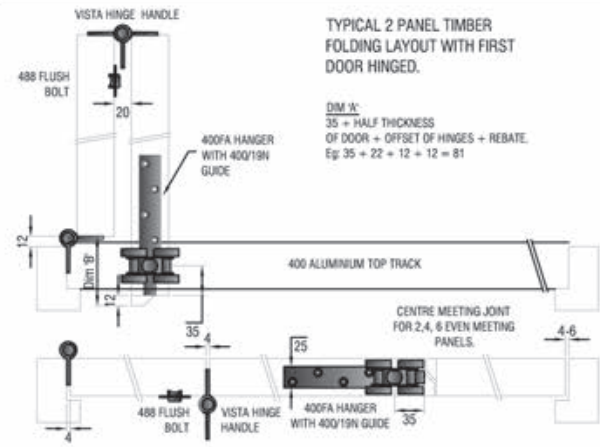

TYPICAL 2 PANEL TIMBER FOLDING LAYOUT WITH FIRST DOOR HINGED.

DIM 'A'
35 + HALF THICKNESS OF DOOR + OFFSET OF HINGES + REBATE.
Eg: 35 + 22 + 12 + 12 = 81

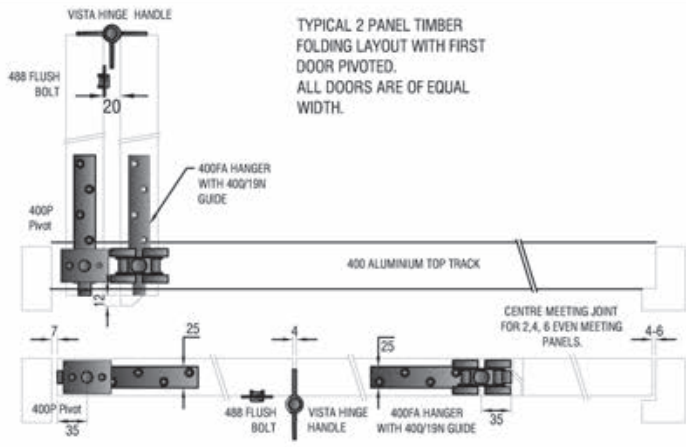

TYPICAL 2 PANEL TIMBER FOLDING LAYOUT WITH FIRST DOOR PIVOTED.
ALL DOORS ARE OF EQUAL WIDTH.

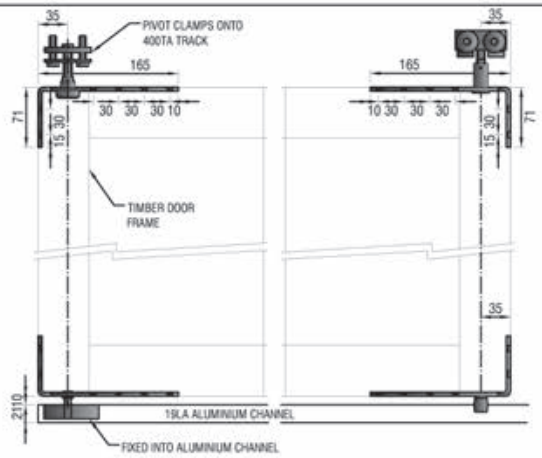

B	DOM	COM		S/FIT	HOS	HOT		SF 2.2

Hillaldam SLIDING DOOR SYSTEMS
South Africa: +27 11 626 1001
www.hillaldam.com

Foldaside 60

Foldaside 60GL

Top hung sliding and folding hardware for frameless interior and exterior folding doors.

Features

- Strong aluminium top track
- Centre and end hung leaves
- Quality proven hardware

Specifications

Max leaf mass: 60kg
Max leaf height: 2400mm
Max leaf width: 800mm
Glass thickness: 10/12mm Toughened glass
Max 6 leaves hinged together and to pivot

The area of a single sliding leaf should be related to all other factors.

Components

- 400TA Aluminium top track
- 19A Aluminium or 19B brass guide channel
- 400GLF Hangers
- GL/19N Guide
- 400P Pivot set for pivot doors
- GL Top and bottom rail with cover plates
- 5025 Rail lock and euro cylinder
- 122 Brush welt
- ECH End cap hinge
- ECHH End cap hinge handle
- P10/12 Glass h-type seals
- GL2 Slide bolt

NOTE:
- This system is not waterproof - only weather resistant.
- Selected fittings available in stainless steel.
- Various finishes available.

For specialist projects contact:

Hillaldam
SLIDING DOOR SYSTEMS

South Africa: +27 11 626 1001
www.hillaldam.com

Sliding / folding door systems
(Domestic, Commercial, Shop fitting, Hospital, Industrial)

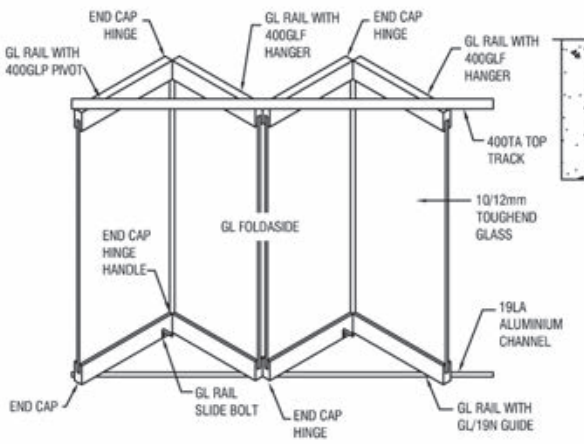

ELEVATION OF HANGER, RAIL AND GLASS CUT OUT DETAIL

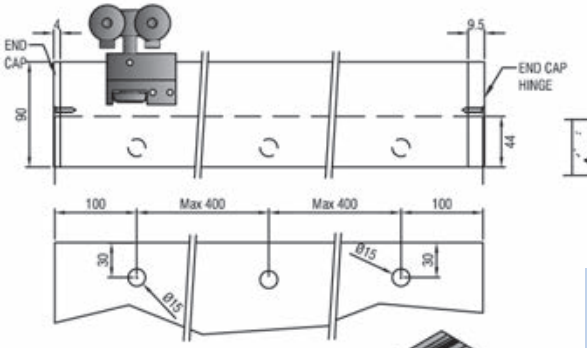

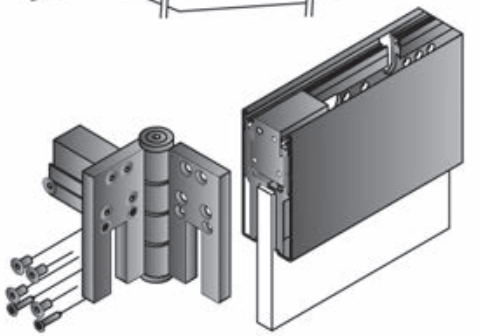

SECTION THROUGH SOFFIT FIX 400TA TRACK, 400GLF HANGER, END CAP HINGE AND HINGE HANDLE

SECTION THROUGH SOFFIT FIX 400TA TRACK, 400GLF HANGER AND END CAP

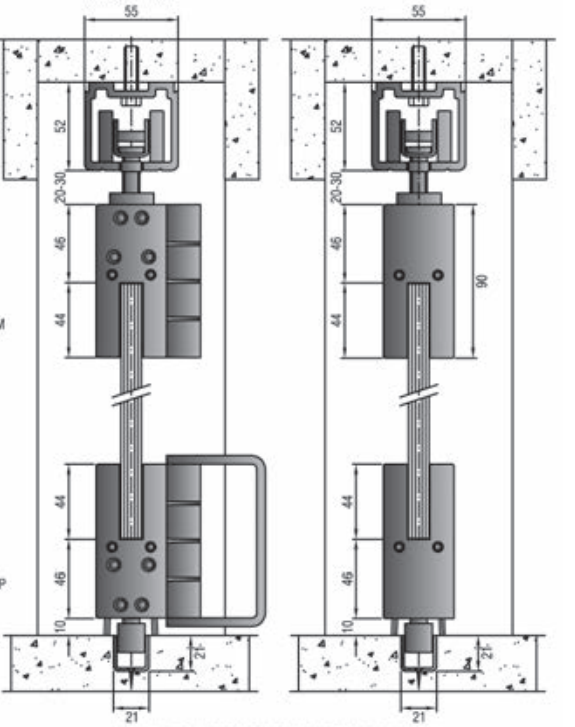

SECTION THROUGH DOORS SHOWING BOTTOM DETAILWITH 19LA ALUMINIUM CHANNEL AND GL/19N GUIDE
SECTION SCALE: 1:4

Mechanism

B	DOM	COM		S/FIT	HOS	HOT		SF 3.1

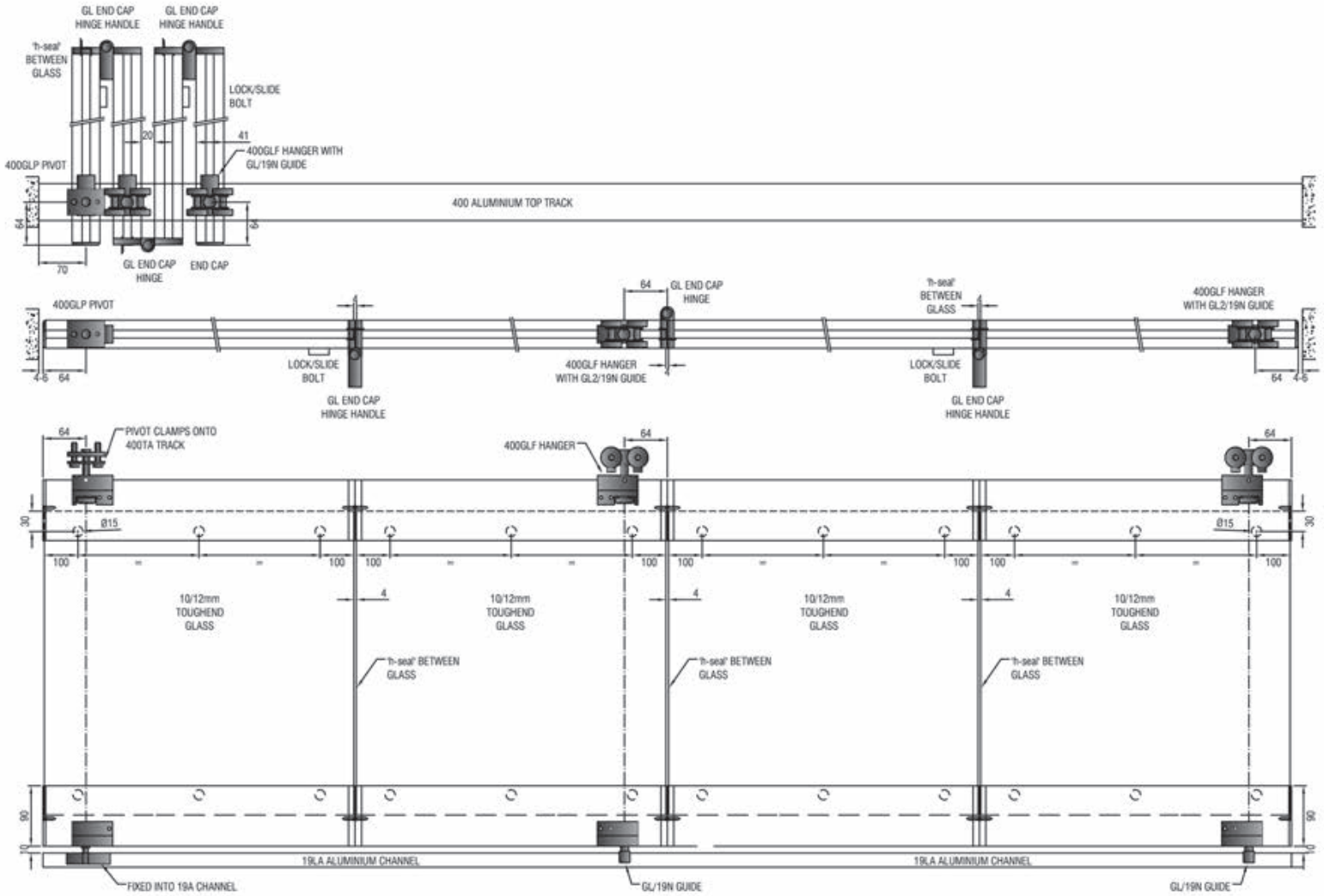

B	DOM	COM		S/FIT	HOS	HOT		SF 3.2

Hillaldam SLIDING DOOR SYSTEMS

South Africa: +27 11 626 1001
www.hillaldam.com

Foldaside 60GL

Foldaside 90

Top hung sliding and folding hardware for interior and exterior aluminium and timber doors.

Features

- Strong aluminium top track
- End hung doors
- Quality proven hardware
- End pivot for equal doors

Specifications

Max leaf mass:90kg
Max leaf height: 3500mm
Max leaf width: 900mm
Leaf thickness: Min 44mm
Max 5 leaves hinged together with pivot

Note: When pivot sets are replaced by hinges, particular attention should be paid by the joiner or aluminium fabricator to leaf sizes.

The area of a single sliding leaf should be related to all other factors.

Components

- 600P Pivot set
- 600TA Aluminium top track
- 600FA Hangers
- 19LA Aluminium or 19B brass guide channel
- 600/19N Bottom guide
- 443B Brass or 443A aluminium hinges
- 868x1 Aluminium door or 866x1 timber door hinge
- VSKH Aluminium door or 86SKH timber door hinge handle
- 503NA/GA Flush pull handle
- 452 Holdback catch
- 455 Roller catch
- 488x150 Flush bolt (timber doors)
- 477LF Single or 477FR double throw flush bolt (aluminium doors)
- 970 Deadbolt lock (timber doors)

NOTE:

- When pivot sets are replaced by hinges, particular attention should be paid by the joiner or aluminium fabricator to leaf sizes.
- All fittings available in stainless steel for coastal applications.
- Various finishes available.

For specialist projects contact:

Hillaldam SLIDING DOOR SYSTEMS

South Africa: +27 11 626 1001
www.hillaldam.com

Sliding / folding door systems
(Domestic, Commercial, Shop fitting, Hospital, Industrial)

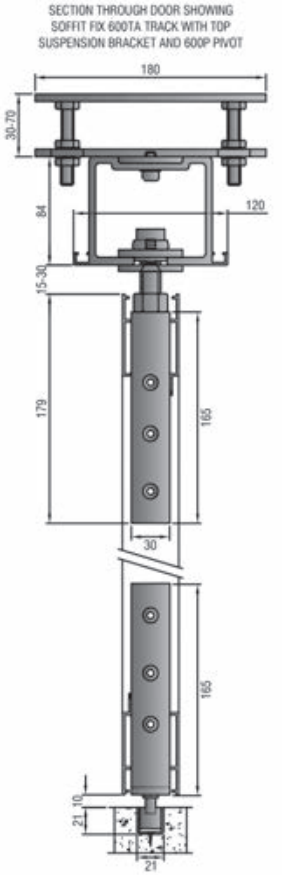

SECTION THROUGH DOORS SHOWING 600P PIVOT SET IN 19LA ALUMINIUM CHANNEL ON ALUMINIUM DOOR SCALE 1:5

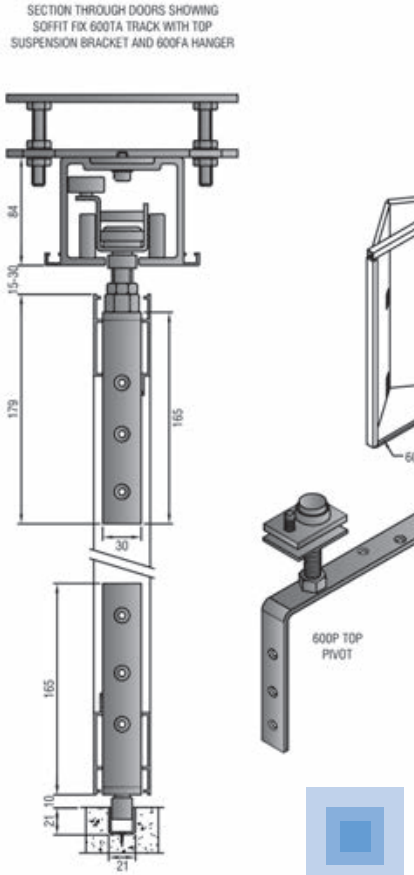

SECTION THROUGH DOORS SHOWING 600/19N GUIDE IN 19LA ALUMINIUM CHANNEL ON ALUMINIUM DOOR SCALE 1:5

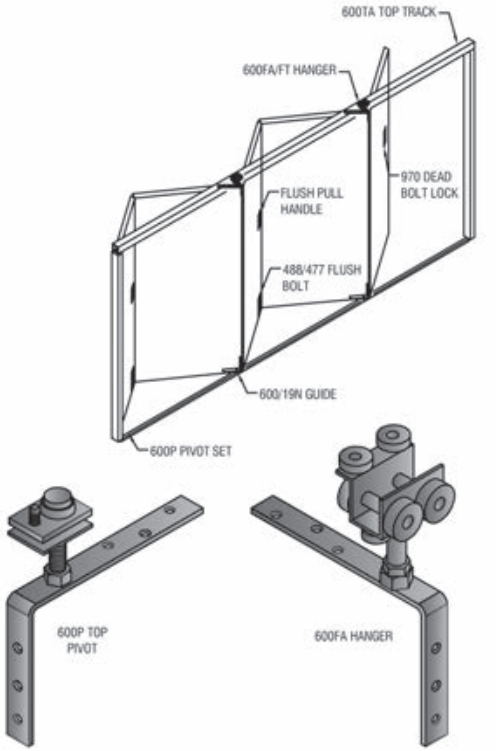

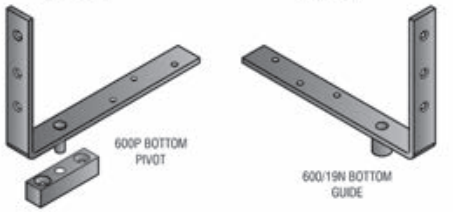

Mechanism

T		COM		S/FIT				SF 4.1

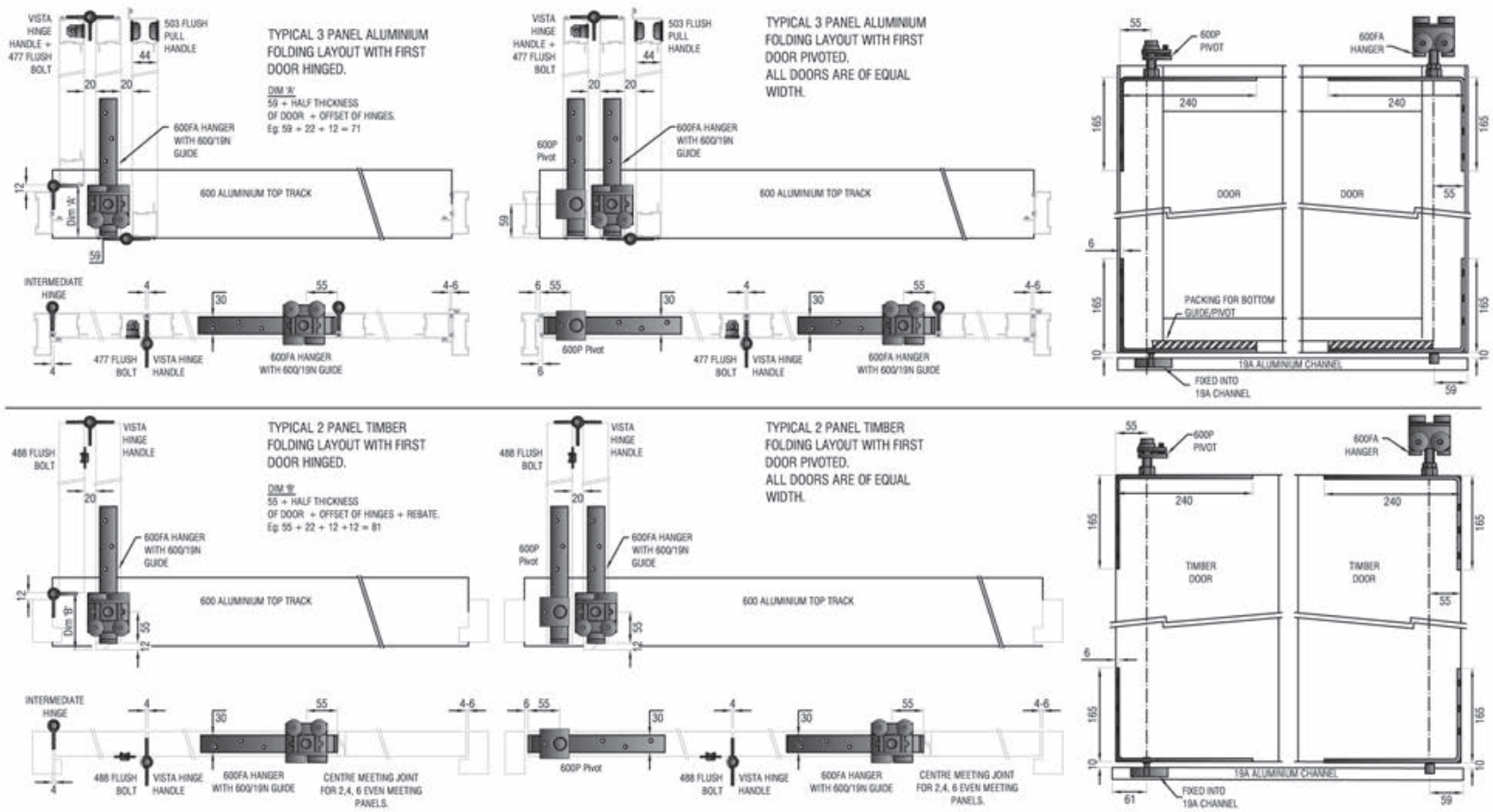

T		COM		S/FIT				SF 4.2

Hillaldam SLIDING DOOR SYSTEMS
South Africa: +27 11 626 1001
www.hillaldam.com

Foldaside 90

Foldaside 90GL

Top hung sliding and folding hardware for frameless interior and exterior folding doors.

Features

- Strong aluminium top track
- Centre and end hung doors
- Quality proven hardware

Specifications

Max leaf mass: 90kg
Max leaf height: 2700mm
Max leaf width: 900mm
Glass thickness: 10/12mm Toughened glass
Max 6 leaves hinged together and to pivot

The area of a single sliding leaf should be related to all other factors.

Components

- 600TA Aluminium top track
- 19A Aluminium or 19B brass guide channel
- 600GL Hangers
- GL/19N Guide
- 600GLP Pivot set for pivot doors
- GL top and bottom rail with cover plates
- 5025 Rail lock and euro cylinder
- 122 Brush welt
- ECH End cap hinge
- ECHH End cap hinge handle
- P10/12 Glass h-type seals
- GL2 Slide bolt

NOTE:
- This system is not waterproof - only weather resistant.
- Selected fittings available in stainless steel.
- Various finishes available.

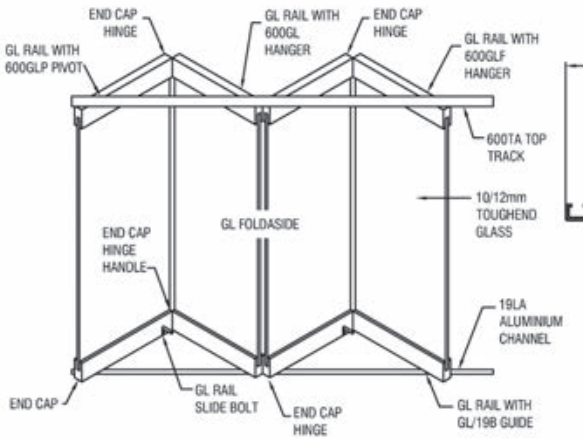

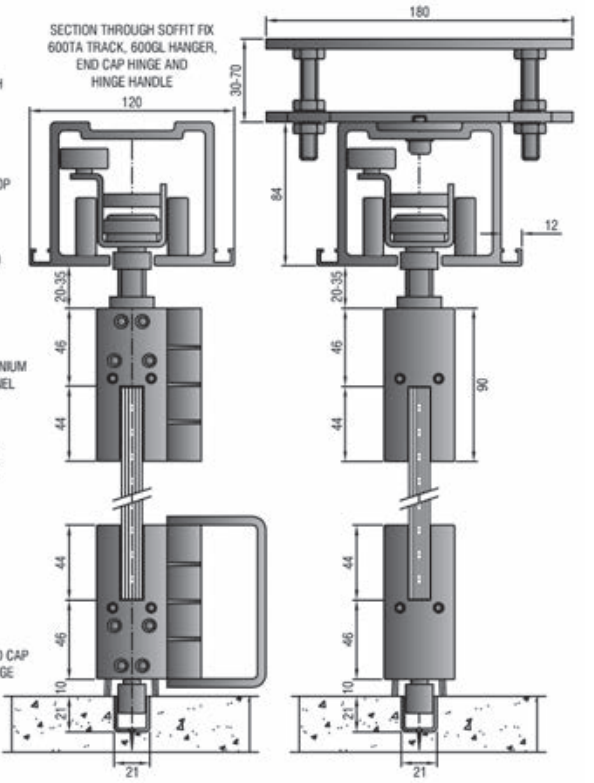

SECTION THROUGH DOORS SHOWING BOTTOM DETAILWITH 19LA ALUMINIUM CHANNEL AND GL/19B GUIDE
SECTION SCALE: 1:4

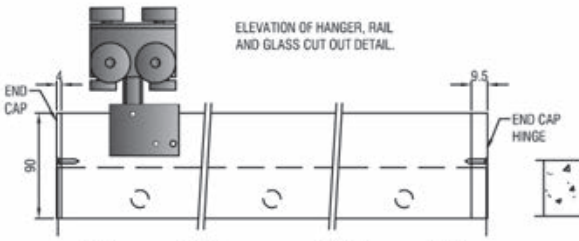

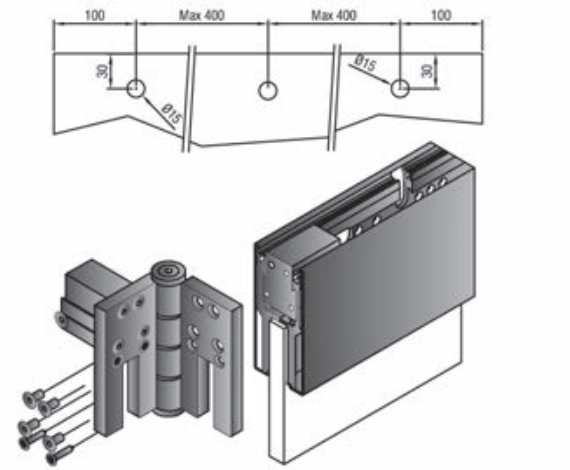

Mechanism

For specialist projects contact:

Hillaldam
SLIDING DOOR SYSTEMS

South Africa: +27 11 626 1001
www.hillaldam.com

Sliding / folding door systems
(Domestic, Commercial, Shop fitting, Hospital, Industrial)

T		COM		S/FIT				SF 5.1

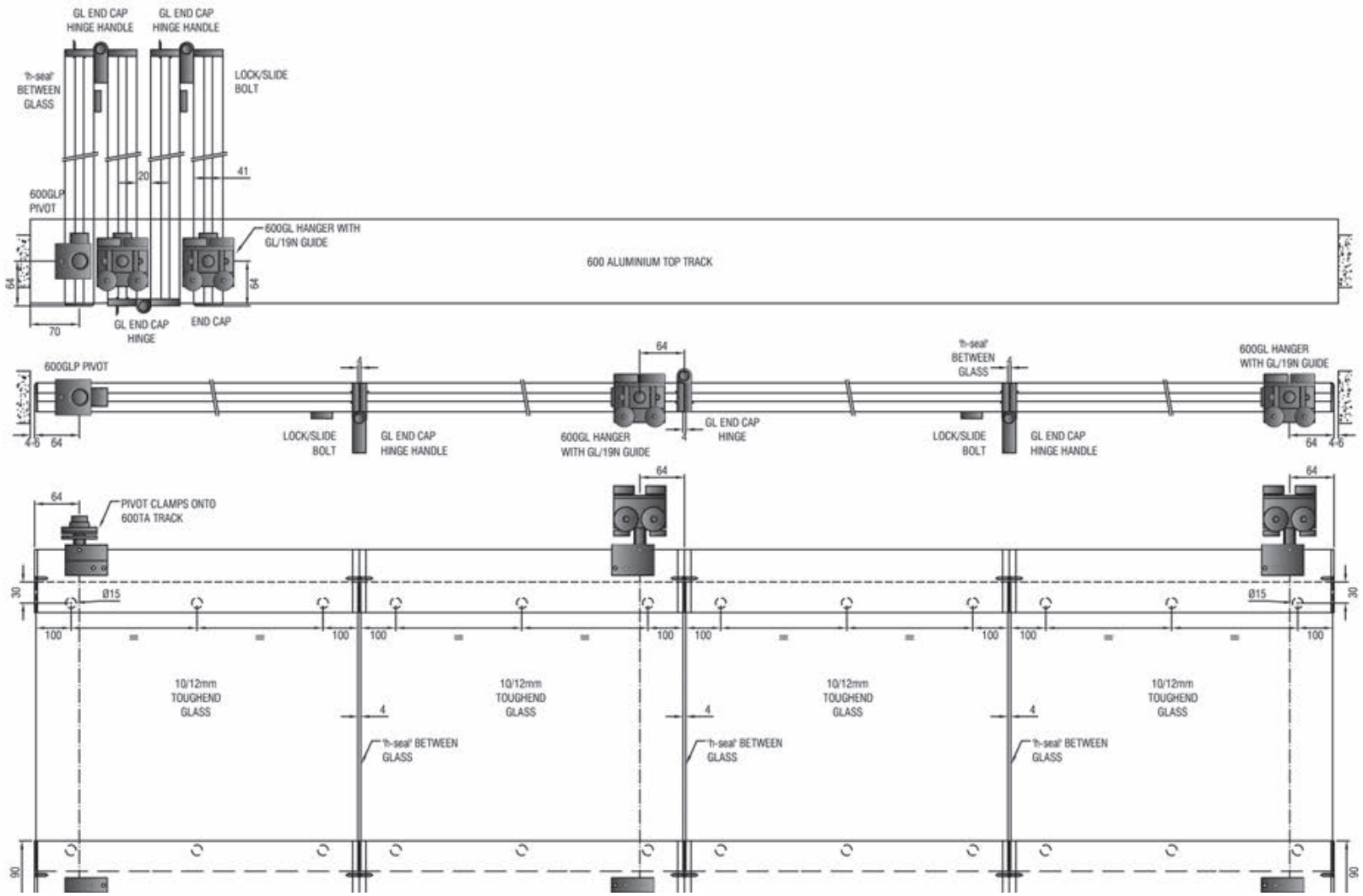

T		COM		S/FIT				SF 5.2

Hillaldam SLIDING DOOR SYSTEMS

South Africa: +27 11 626 1001
www.hillaldam.com

Foldaside 90GL

Partitionfold 100

Top hung sliding and folding hardware for interior aluminium and timber doors.

Features

- Strong aluminium top track
- Centre hung leaves
- Quality proven hardware
- No floor channel required

Specifications

Max leaf mass: 100kg
Max leaf height: 3000mm
Max leaf width: 1200mm
Leaf thickness: 44mm
Leaves hinged together in pairs and sliding either way with half-width locking leaf.

The area of a single sliding leaf should be related to all other factors.

Components

- 400TA Aluminium top track
- 400TP/A Hanger for aluminium door
  Or 400TP/T Hanger for timber door
- 443B Brass or 443A aluminium hinges
- 868x1 Aluminium door or 866x1 timber door hinge
- VSKH Aluminium door or 86SKH timber door hinge handle
- 503NA/GA Flush pull handle
- 452 Holdback catch
- 455 Roller catch
- 488x150 Flush bolt (timber door)
  or 477L Flush bolt (aluminium doors)
- 970 Deadbolt lock (timber door)

NOTE:
- All fittings available in stainless steel for coastal applications.
- Various finishes available.

For specialist projects contact:

Hillaldam
SLIDING DOOR SYSTEMS

South Africa: +27 11 626 1001
www.hillaldam.com

Sliding / folding door systems
(Domestic, Commercial, Shop fitting, Hospital, Industrial)

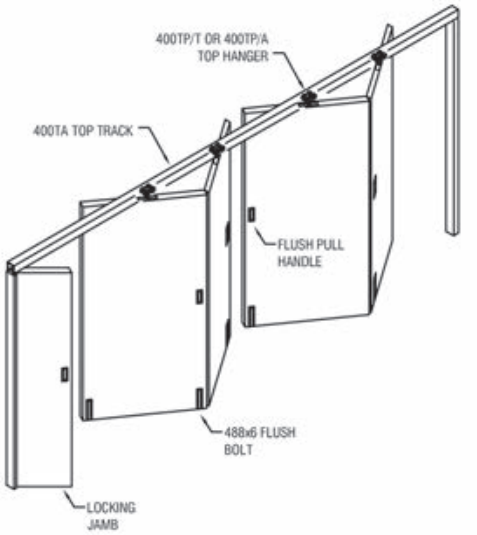

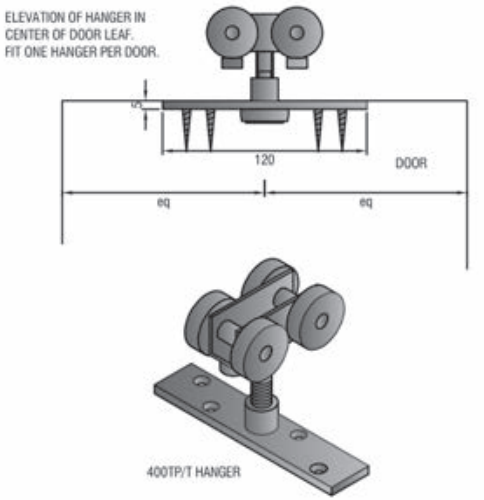

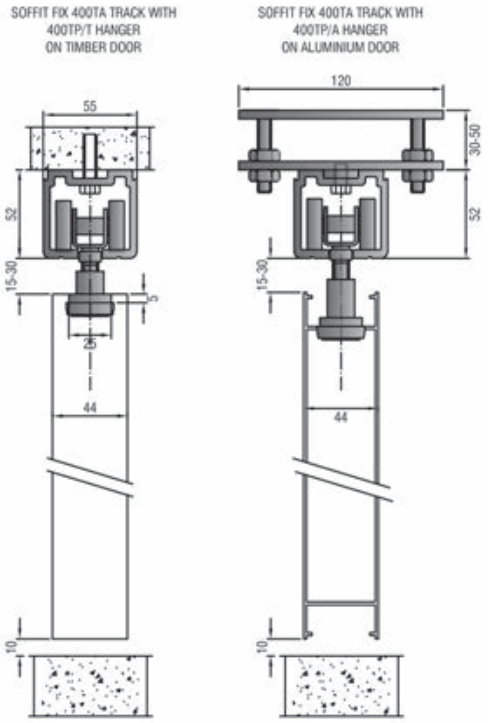

SECTION THROUGH DOORS
SECTION SCALE: 1:4

Mechanism

T		COM		S/FIT	HOS	HOT		SF 6.1

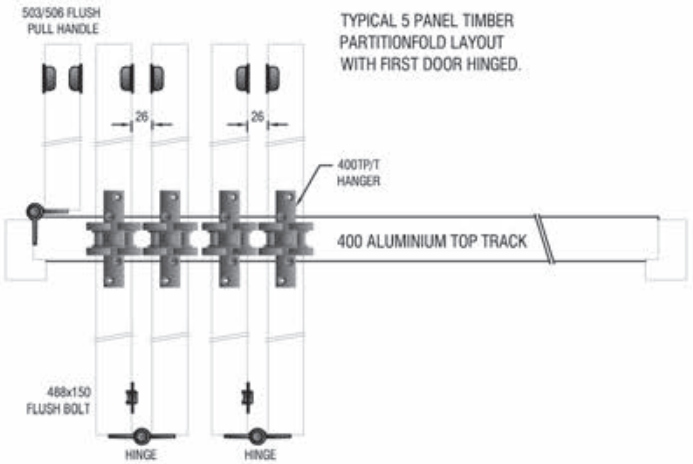

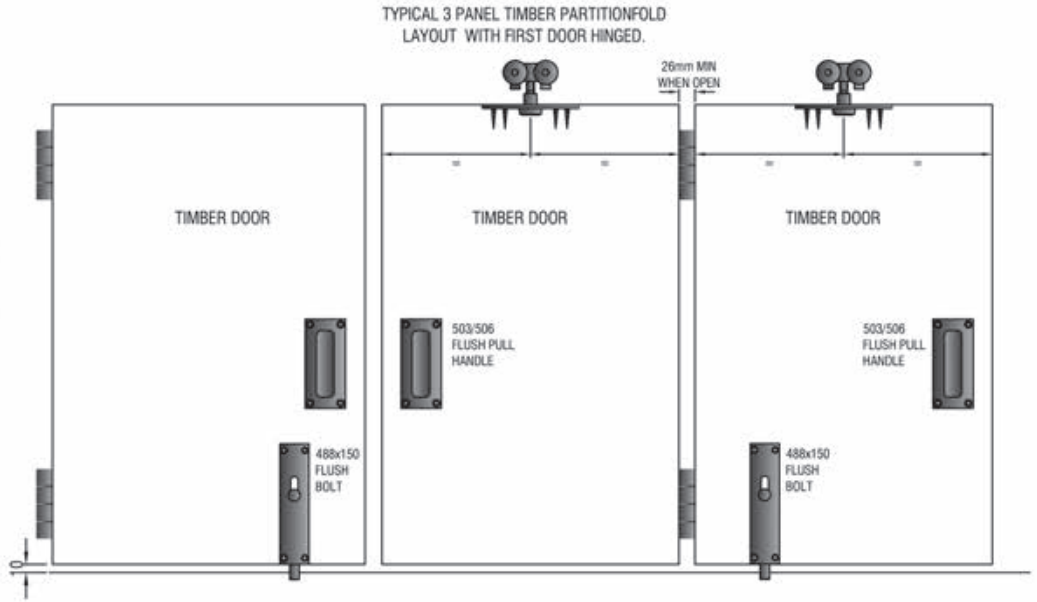

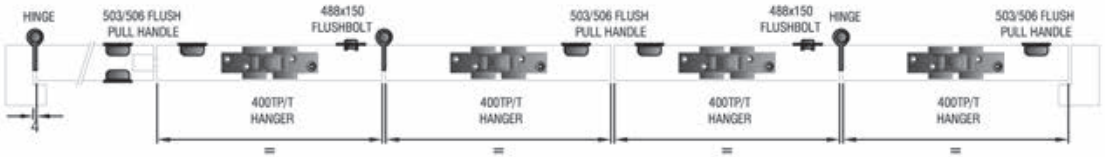

T		COM		S/FIT	HOS	HOT		SF 6.2

Partitionfold 150

Top hung sliding and folding hardware for interior aluminium and timber doors.

Features

- Strong aluminium top track
- Centre hung leaves
- Quality proven hardware
- No floor channel required

Specifications

Max leaf mass: 150kg
Max leaf height: 3500mm
Max leaf width: 1200mm
Leaf thickness: min 44mm

The area of a single sliding leaf should be related to all other factors.

Components

- 600TA Aluminium top track
- 600TF Hanger
- 19LA Aluminium guide channel
- 443B Brass or 443A aluminium hinges
- 503NA/GA Flush pull handle
- 868x1 Aluminium door or 866x1 timber door hinge
- VSKH Aluminium door or 86SKH timber door hinge handle
- 452 Holdback catch
- 455 Roller catch
- 488x150 Flush bolt (timber door) or 498LF Flush bolt (aluminium doors)
- 970 Deadbolt lock (timber door)

NOTE:
- All fittings available in stainless steel for coastal applications.
- Various finishes available.

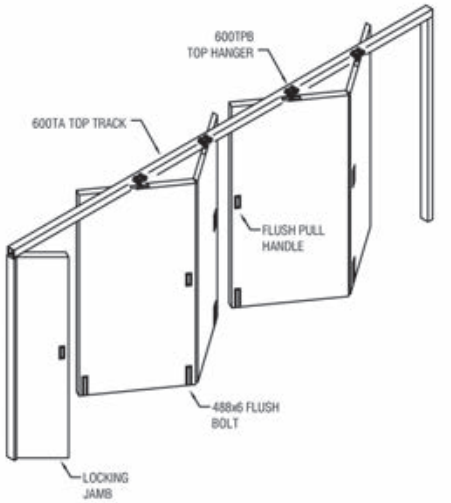

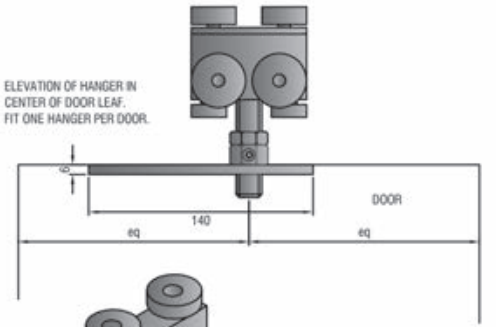

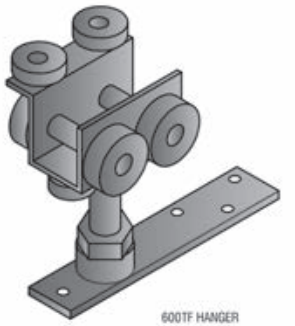

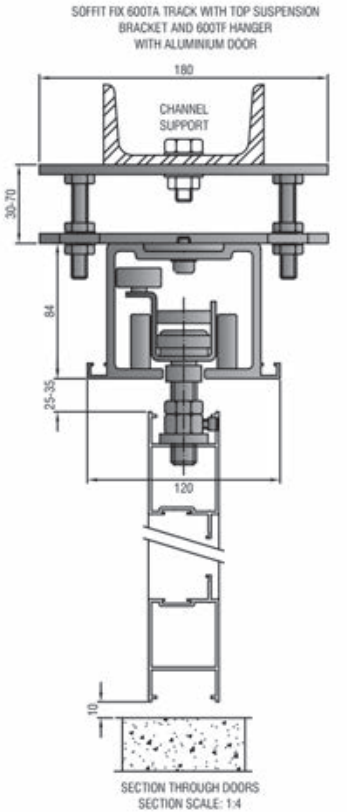

Mechanism

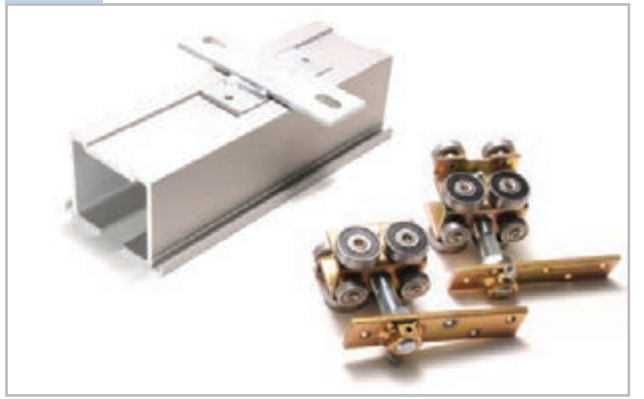

T		COM		S/FIT	HOS	HOT		SF 7.1

For specialist projects contact:

Hillaldam
SLIDING DOOR SYSTEMS

South Africa: +27 11 626 1001
www.hillaldam.com

Sliding / folding door systems
(Domestic, Commercial, Shop fitting, Hospital, Industrial)

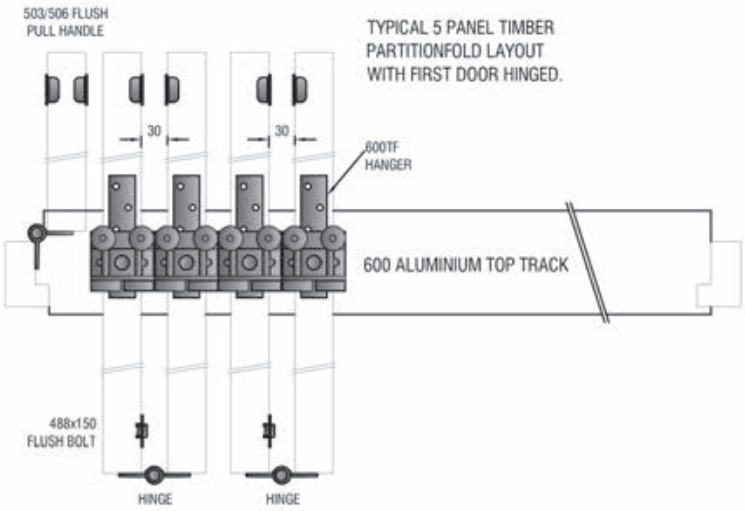

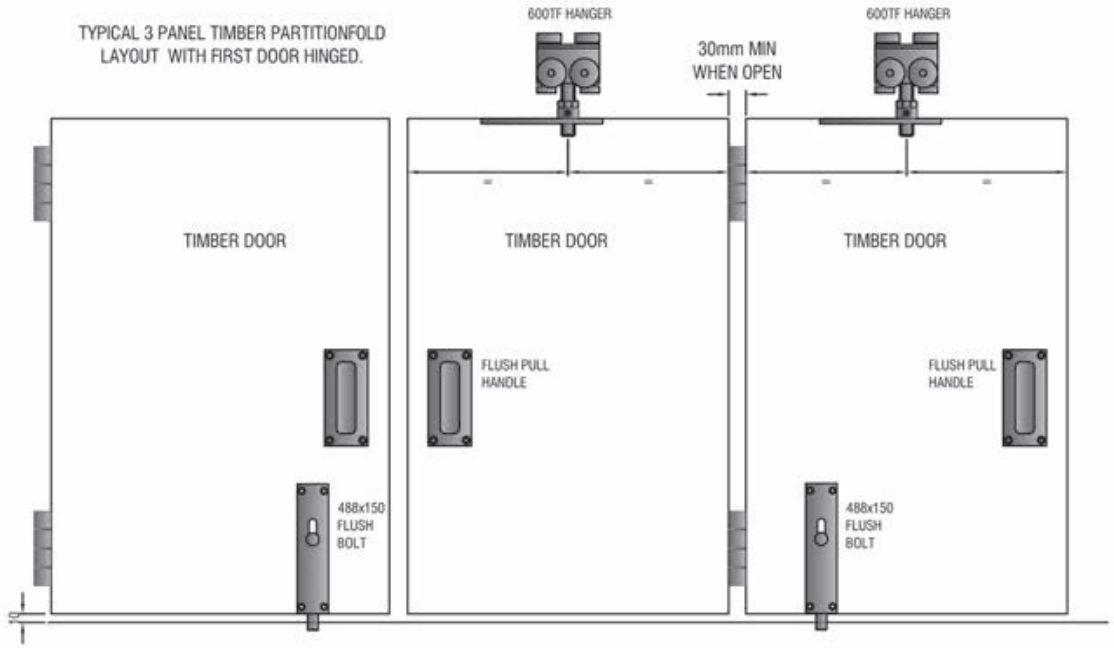

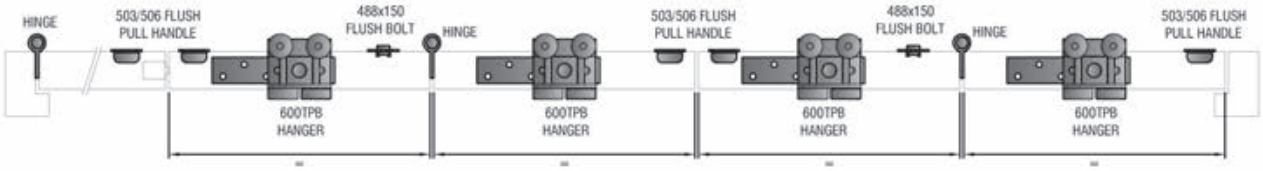

T		COM		S/FIT	HOS	HOT		SF 7.2

Centafold 50

Top hung sliding hardware for interior aluminium and timber doors.

Features

- Strong aluminium top track
- Centre hung leaves
- Quality proven hardware

Specifications

Max door mass: 50kg
Max door height: 2400mm
Max door width: 1000mm
Door thickness: 44mm
Max 7½ leaves hinged together and to pivot

The area of a single sliding leaf should be related to all other factors.

Components

- 200P Pivot set
- 200TA Aluminium top track
- 200TPT/TPA Hangers
- 19A Aluminium or 19B brass guide channel
- 40/19N Bottom guide
- 443B Brass or 443A Aluminium hinges
- 868x1 Aluminium door or 866x1 timber door hinge
- VSKH Aluminium door or 86SKH timber door hinge handle
- 503NA/GA Flush pull handle
- 452 Holdback catch
- 488x150 flush bolt (timber doors)
- 477LF Single or 477FR double throw flush bolt (aluminium doors)
- 970 Deadbolt lock (timber doors)

NOTE:

- When pivot sets are replaced by hinges, particular attention should be paid by the joiner or aluminium fabricator to leaf sizes.
- All fittings available in stainless steel for all coastal applications.
- Various finishes available.

For specialist projects contact:

Hillaldam
SLIDING DOOR SYSTEMS

South Africa: +27 11 626 1001
www.hillaldam.com

Sliding / folding door systems
(Domestic, Commercial, Shop fitting, Hospital, Industrial)

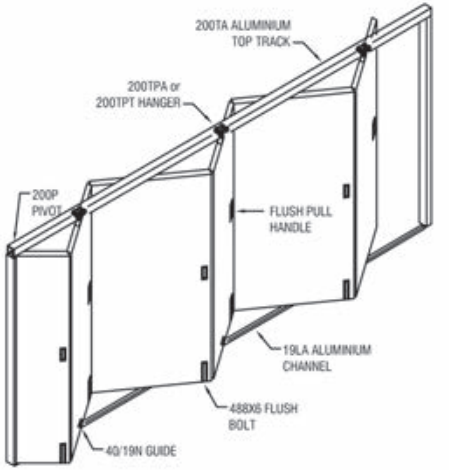

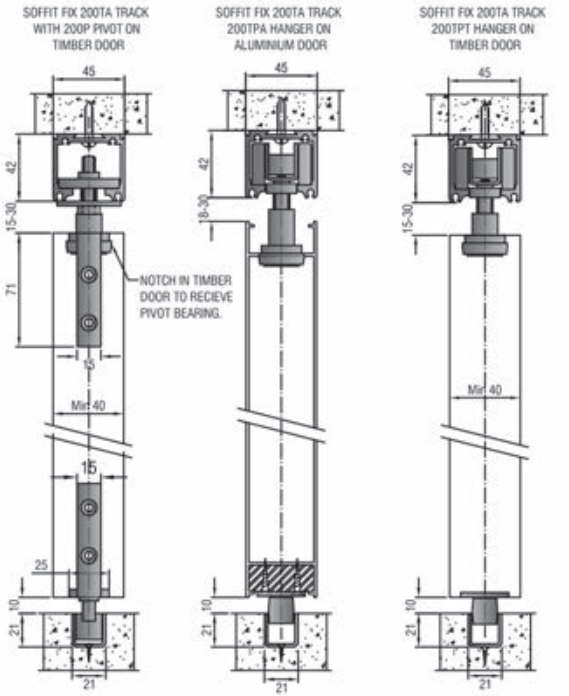

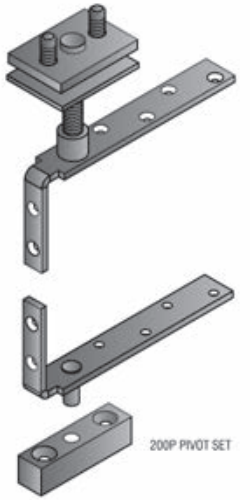

Mechanism

T	DOM	COM			HOS	HOT		SF 8.1

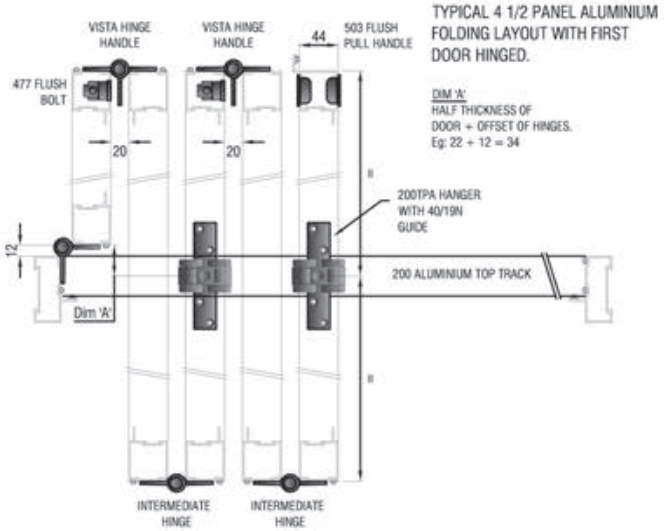

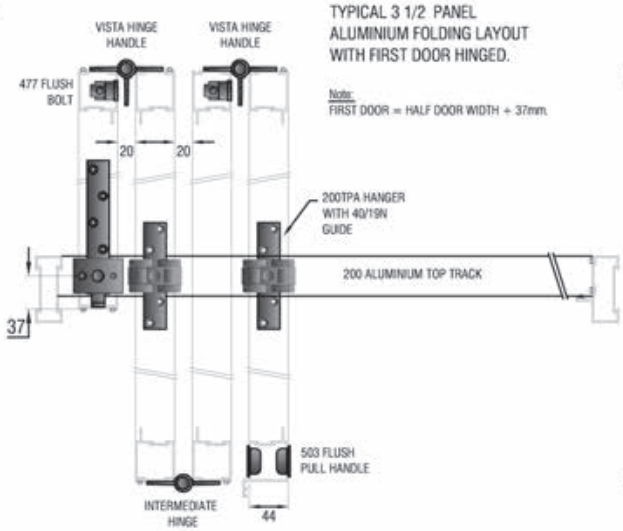

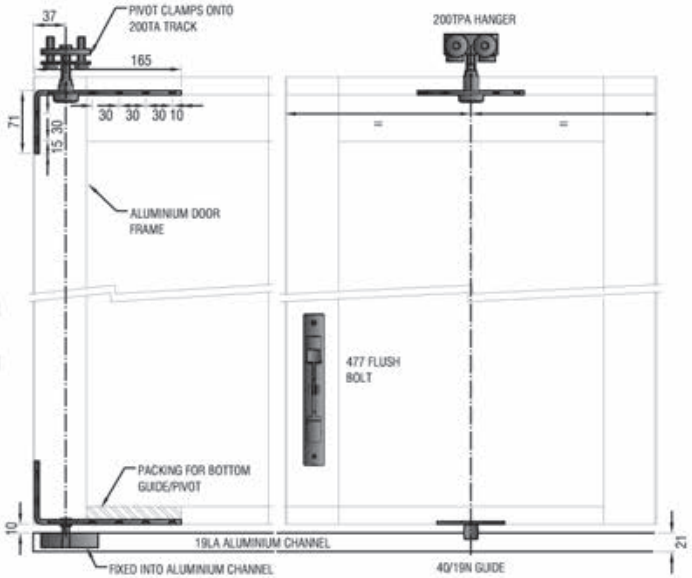

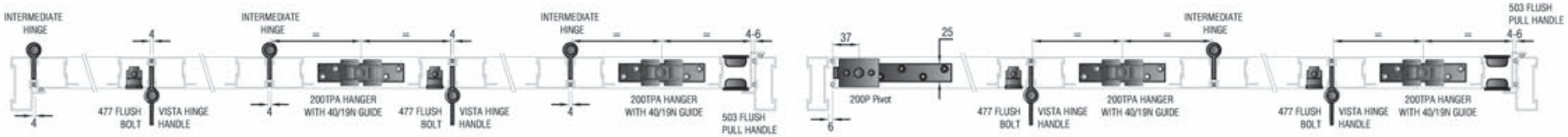

T	DOM	COM			HOS	HOT		SF 8.2

Centafold 100

Top hung sliding hardware for interior aluminium and timber doors.

Features

- Strong aluminium top track
- Centre hung leaves
- Quality proven hardware

Specifications

Max door mass: 100kg
Max door height: 2700mm
Max door width: 1200mm
Door thickness: 44mm
Max 7½ leaves hinged together and to pivot

The area of a single sliding leaf should be related to all other factors.

Components

- 400P Pivot set
- 400TA Aluminium top track
- 400TPT/TPA Hangers
- 19A Aluminium or 19B brass guide channel
- 40/19N Bottom guide
- 443B Brass or 443A Aluminium hinges
- 868x1 Aluminium door or 866x1 timber door hinge
- VSKH Aluminium door or 86SKH timber door hinge handle
- 503NA/GA Flush pull handle
- 452 Holdback catch
- 488x150 Flush bolt (timber doors)
- 477LF Single or 477FR Double throw flush bolt
- 970 Deadbolt lock (timber doors)

NOTE:
- When pivot sets are replaced by hinges, particular attention should be paid by the joiner or aluminium fabricator to leaf sizes.
- All fittings available in stainless steel for all coastal applications.
- Various finishes available.

For specialist projects contact:

Hillaldam
SLIDING DOOR SYSTEMS

South Africa: +27 11 626 1001
www.hillaldam.com

Sliding / folding door systems
(Domestic, Commercial, Shop fitting, Hospital, Industrial)

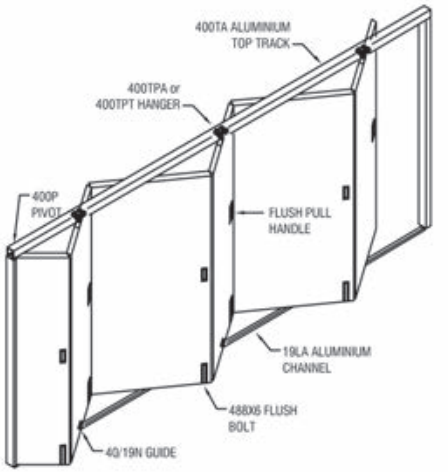

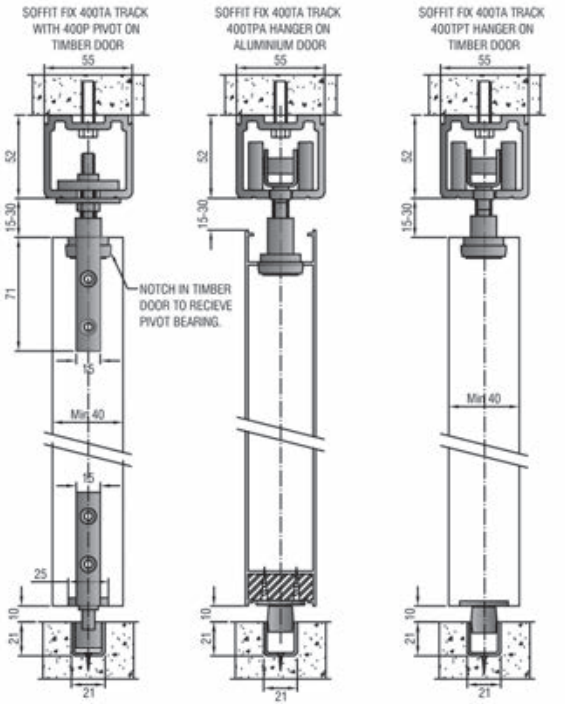

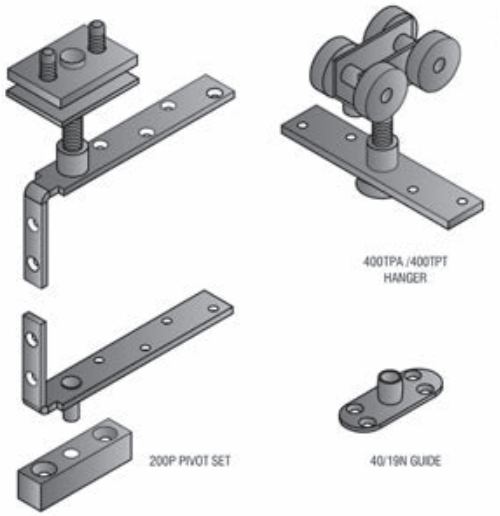

Mechanism

T	DOM	COM		S/FIT	HOS	HOT		SF 9.1

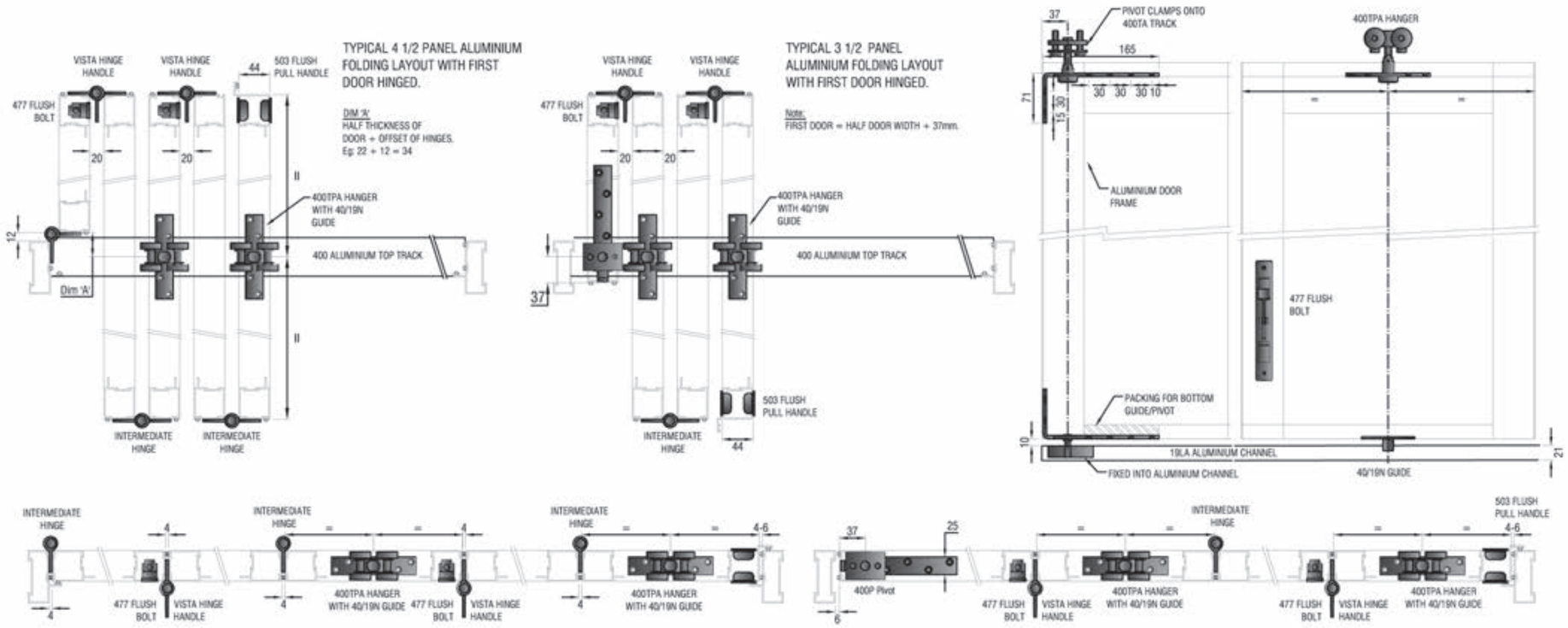

T	DOM	COM		S/FIT	HOS	HOT		SF 9.2

Centafold 150

Top hung sliding hardware for interior aluminium and timber doors.

Features

- Strong aluminium top track
- Centre hung leaves
- Quality proven hardware

Specifications

Max door mass: 150kg
Max door height: 3500mm
Max door width: 1500mm
Door thickness: 44mm
Max 7½ leaves hinged together and to pivot.

The area of a single sliding leaf should be related to all other factors.

Components

- 600P Pivot set
- 600TA Aluminium top track
- 600TPB Hangers
- 19A Aluminium or 19B brass guide channel
- 40/19N Bottom guide
- 443B Brass or 443A Aluminium hinges
- 868x1 Aluminium door or 866x1 timber door hinge
- VSKH Aluminium door or 86SKH timber door hinge handle
- 503NA/GA Flush pull handle
- 452 Holdback catch
- 488x150 Flush bolt (timber doors)
- 477LF Single or 477FR double throw flush bolt (aluminium doors)
- 970 Deadbolt lock (timber doors)

NOTE:

- When pivot sets are replaced by hinges, particular attention should be paid by the joiner or aluminium fabricator to leaf sizes.
- All fittings available in stainless steel for all coastal applications.
- Various finishes available.

For specialist projects contact:

Hillaldam
SLIDING DOOR SYSTEMS

South Africa: +27 11 626 1001
www.hillaldam.com

Sliding / folding door systems
(Domestic, Commercial, Shop fitting, Hospital, Industrial)

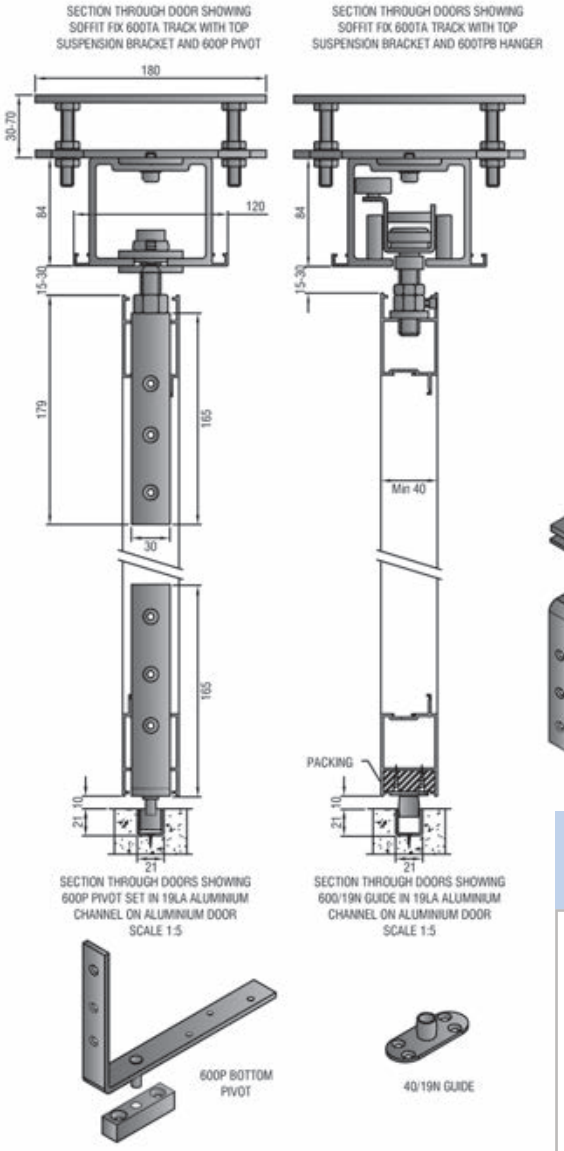

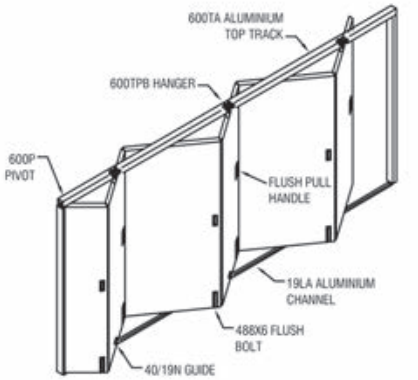

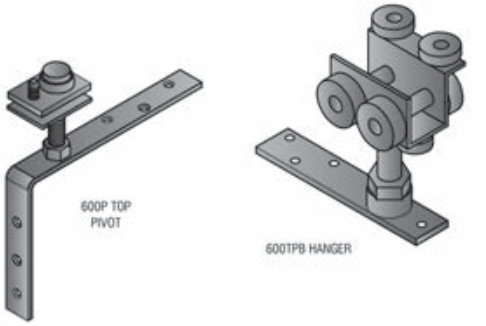

Mechanism

T		COM		S/FIT	HOS	HOT		SF 10.1

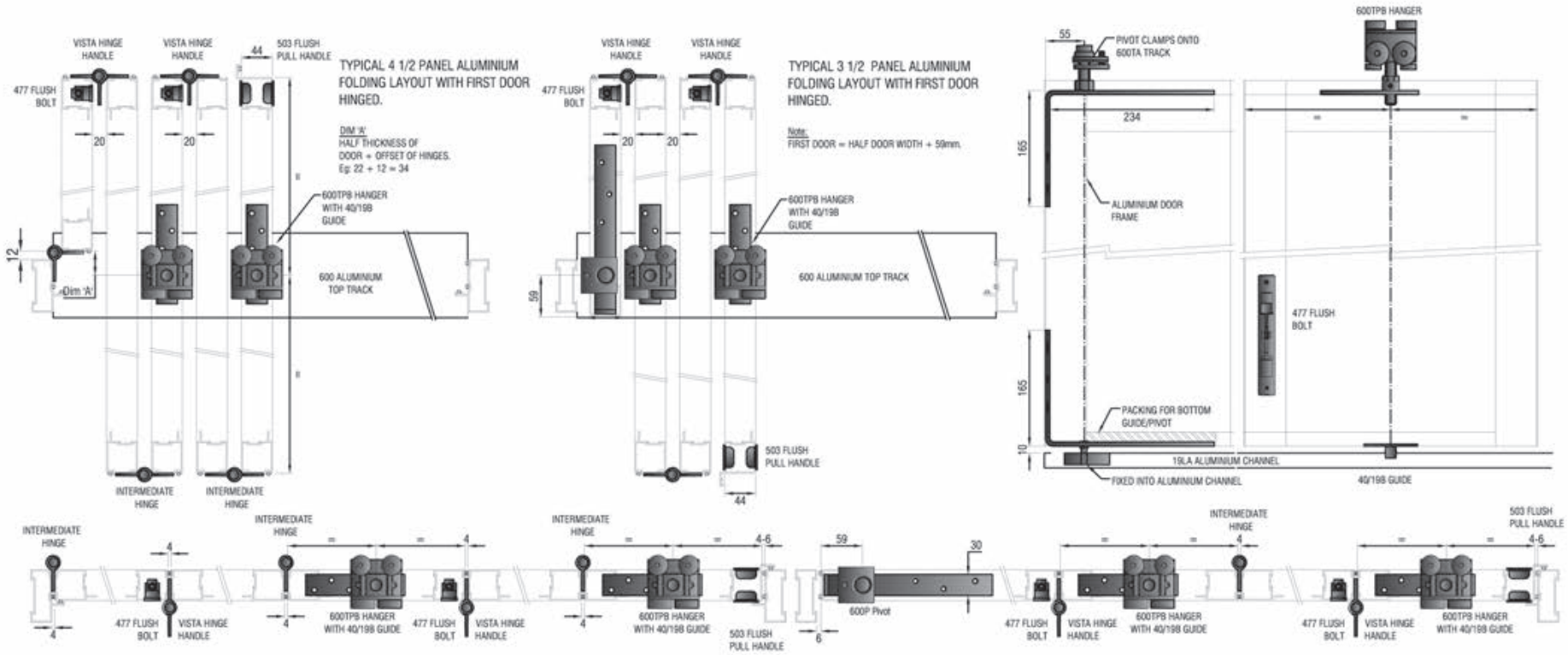

T		COM		S/FIT	HOS	HOT		SF 10.2

Vistafold™ 70A

Bottom rolling sliding and folding hardware for weatherproof aluminium doors.

Features

- Fully weatherproof system (tested to AAAMSA A1)
- Equal width leaves
- Quality proven hardware
- Uses standard aluminium shopfront door profiles
- Non corrosive hardware

Specifications

Hardware fits standard 44mm shopfront door profiles with Vistafold frames
Max leaf mass: 70kg
Max leaf height: 2700mm
Max leaf width: 900mm
Recommended: 2,3,4 or max 5 leaves hinged together.

The area of a single sliding leaf should be related to all other factors.

Components

- 3/5 LEAF: 868x6 Top guides
  870x1 Bottom rollers
  868x1 Intermediate hinges
  VSKH Vista hinge handle
- 2/4 LEAF: 871x5 Top end guides
  871x2 Bottom end rollers
  871x7 Top meeting guides
  871x3 Bottom meeting rollers
  871x1 Intermediate hinges
  871VSK Hinge handle
- FITTINGS: VF01 Side frame
  VF02 Top frame
  VF03 Bottom frame
  CL34 Bottom track
  868B Bubble seal
  DO90 Woolpile
  477L/FR Double throw flush bolt
  EB1 Holdback catch

NOTE:
- All fittings suitable for all coastal applications in butt or sinkless hinges.
- Various finishes available.

For specialist projects contact:

Hillaldam
SLIDING DOOR SYSTEMS

South Africa: +27 11 626 1001
www.hillaldam.com

Sliding / folding door systems
(Domestic, Commercial, Shop fitting, Hospital, Industrial)

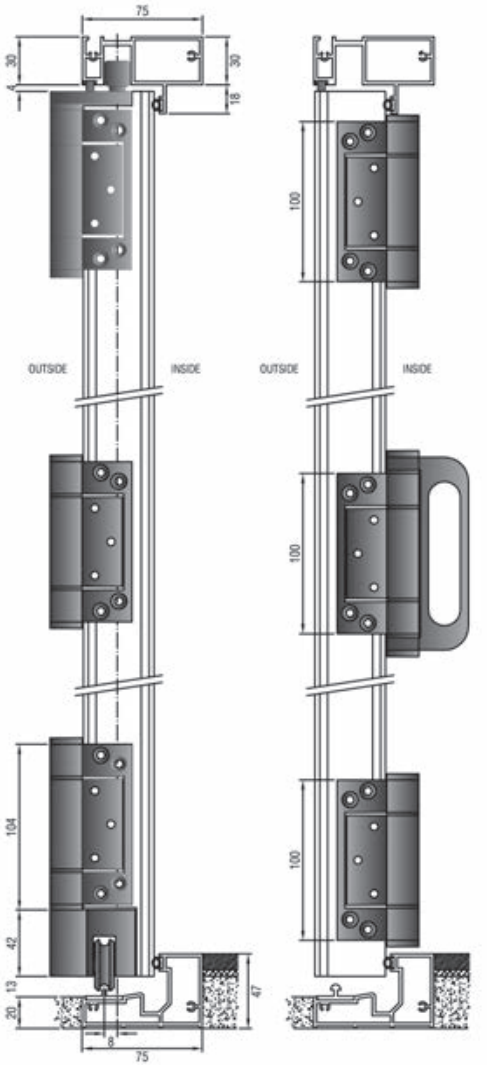

SECTION THROUGH DOOR AT ROLLER AND GUIDE. SCALE 1:4

SECTION THROUGH DOOR AT HINGE HANDLE SCALE 1:4

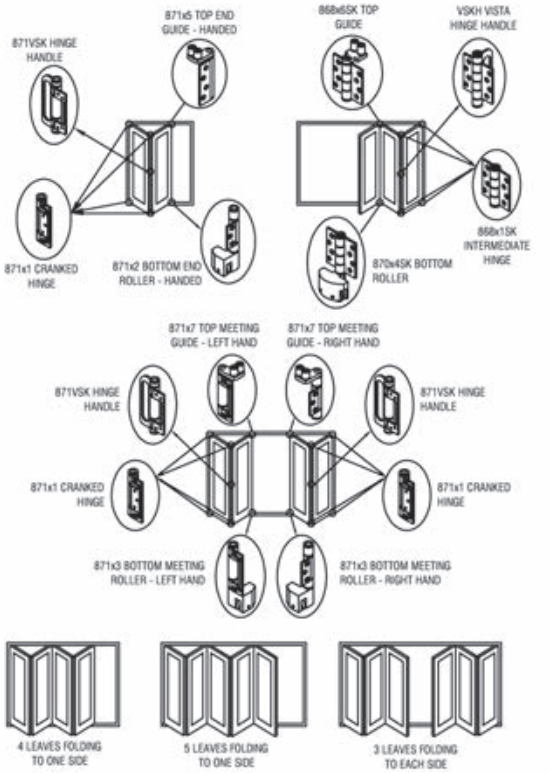

Mechanism

B	DOM	COM		S/FIT	HOS	HOT		SF 11.1

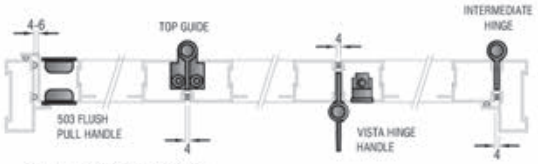

PLAN OF DOORS SHOWING TOP GUIDE

PLAN OF DOORS SHOWING TOP GUIDE

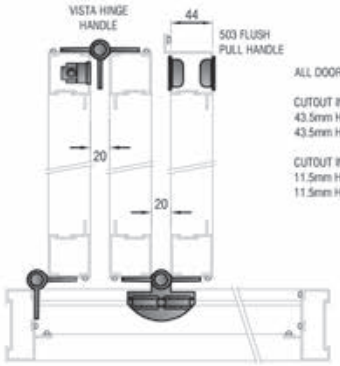

PLAN OF DOORS SHOWING BOTTOM ROLLER

ALL DOOR LEAVES EQUAL WIDTHS

CUTOUT IN DOOR FOR BOTTOM ROLLER
43.5mm HIGH x 33mm FROM HINGE IN DOOR EDGE
43.5mm HIGH x 8.5mm FROM HINGE IN DOOR FACE

CUTOUT IN DOOR FOR TOP GUIDE
11.5mm HIGH x 33mm FROM HINGE IN DOOR EDGE
11.5mm HIGH x 7mm FROM HINGE IN DOOR FACE

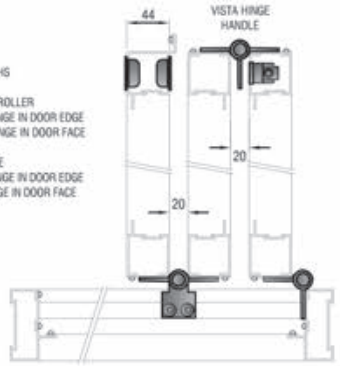

PLAN OF DOORS SHOWING TOP GUIDE

PLAN OF DOORS SHOWING BOTTOM ROLLER

NOTE: DOOR STILES MIN 650mm WIDE

ALL DOOR LEAVES EQUAL WIDTHS

CUTOUT IN DOOR FOR BOTTOM ROLLER
43.5mm HIGH x 32mm FROM HINGE IN DOOR EDGE
43.5mm HIGH x 21mm FROM HINGE IN DOOR FACE

CUTOUT IN DOOR FOR TOP GUIDE
11.5mm HIGH x 32mm FROM HINGE IN DOOR EDGE
11.5mm HIGH x 21mm FROM HINGE IN DOOR FACE

PLAN OF DOORS SHOWING TOP GUIDE

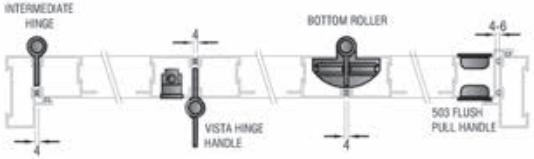

PLAN OF DOORS SHOWING BOTTOM ROLLER

3 LEAVES FOLDING TO ONE SIDE

CALCULATIONS - UNEVEN PANEL - 3; 5; 7
Where:
PW = Panel Width
OW = Opening Width
P = No. of Panels
TF = Thickness of Frame

CALCULATIONS - UNEVEN PANEL - 3; 5; 7

For an opening using sinkless hinges:
A 4mm gap between panels is allowed for and a 7mm gap between the hinge leaf and the jamb to accomodate the lock.

$$\text{Panel Width (PW)} = \frac{OW - (2xTF) - (Px4) - 7}{P}$$

For an opening using butt hinges:
A 8mm gap between panels is allowed for and a 7mm gap between the hinge leaf and the jamb to accomodate the lock.

$$\text{Panel Width (PW)} = \frac{OW - (2xTF) - (Px8) - 7}{P}$$

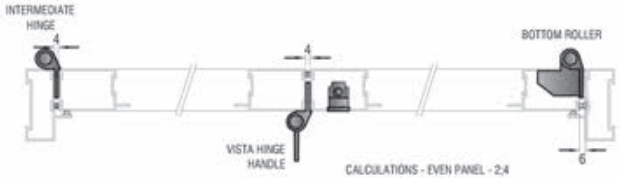

PLAN OF DOORS SHOWING BOTTOM ROLLER

2 LEAVES FOLDING TO ONE SIDE

CALCULATIONS - EVEN PANEL - 2;4
Where:
PW = Panel Width
OW = Opening Width
P = No. of Panels
E = No. of End Panels
TF = Thickness of Frame
10mm clearance to allow kick of doors

CALCULATIONS - EVEN PANEL - 2;4

For an opening using cranked hinges and all doors of even width:

$$PW = \frac{OW - (2xTF) - (Px4) - 6}{P}$$

For an opening using non-cranked hinges where the end door is 12mm longer:

$$PW = \frac{OW - (2xTF) - (Px4) - 6 - (12xE)}{P}$$

Once you have PW for the non-cranked formula, simply add back 12mm to each end panel to determine its width.

B	DOM	COM		S/FIT	HOS	HOT	W/P	SF 11.2

Vistafold™ 70T

Bottom rolling sliding and folding hardware for timber doors in a rebated frame.

Features

- Rebated frame and doors for weather resistant applications
- Equal width leaves
- Hardware concealed in door
- Non corrosive hardware

Specifications

Max leaf mass: 70kg
Max leaf height: 2700mm
Max leaf width: 900mm
Recommended: 2,3,4 or max 5 leaves hinged together and to the frame, folding either way.

The area of a single sliding leaf should be related to all other factors.

Components

- 3/5 LEAF:	866x6 Top guides VTx4 Bottom rollers 866x1 Intermediate hinges 86SKH Hinge handle
- 2/4 LEAF:	TE40x5 Top end guide TE40x2 Bottom end roller TE40x7 Top meeting guide TE40x3 Bottom meeting guide 871x1 Intermediate hinges
- FITTINGS:	19A Aluminium or 19L Brass top guide channel 815LB Brass bottom track 503NA/GA Flush pull handles 488x150 Flush bolt

NOTE:
- All fittings suitable for all coastal applications in sinkless and butt hinges.
- Available in natural & gold anodised.

For specialist projects contact:

Hillaldam
SLIDING DOOR SYSTEMS

South Africa: +27 11 626 1001
www.hillaldam.com

Sliding / folding door systems
(Domestic, Commercial, Shop fitting, Hospital, Industrial)

NO - SEE VISTAFOLD ELITE BROCHURE

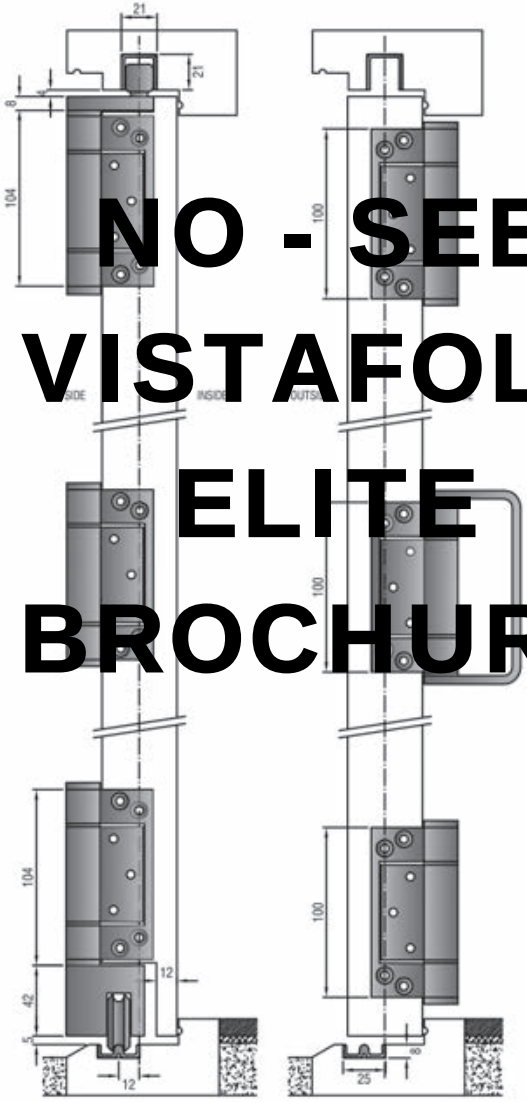

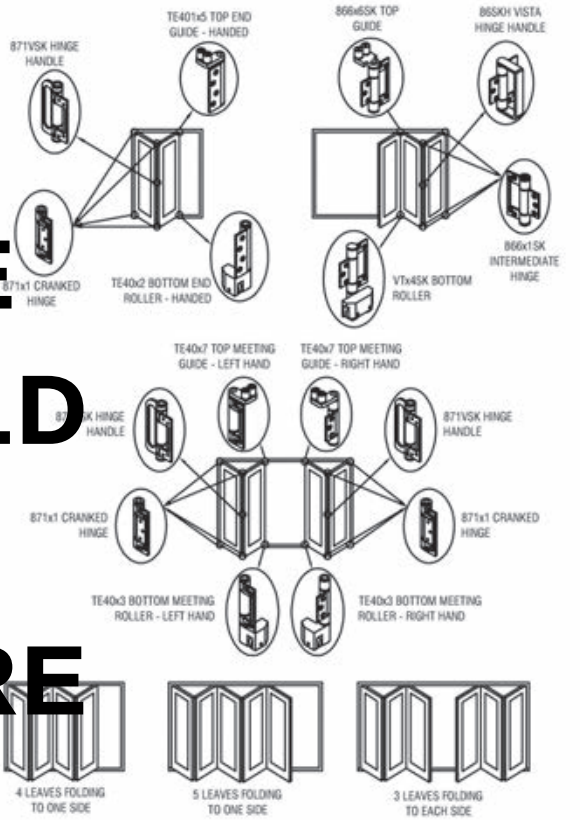

Mechanism

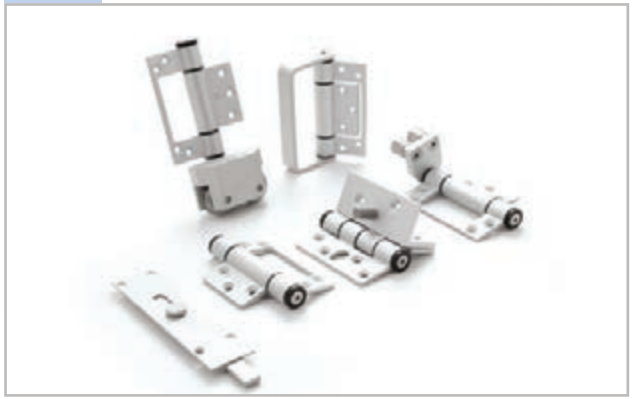

B	DOM	COM		S/FIT	HOS	HOT	W/R	SF 12.1

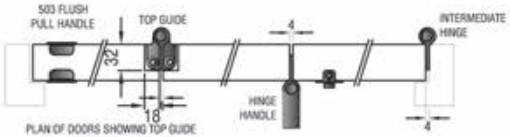

PLAN OF DOORS SHOWING TOP GUIDE

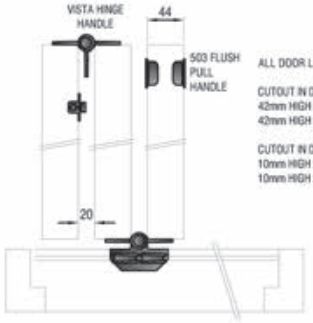

PLAN OF DOORS SHOWING BOTTOM ROLLER

ALL DOOR LEAVES EQUAL WIDTHS

CUTOUT IN DOOR FOR BOTTOM ROLLER
42mm HIGH x 34mm FROM HINGE IN DOOR EDGE
42mm HIGH x 32mm FROM HINGE IN DOOR FACE

CUTOUT IN DOOR FOR TOP GUIDE
10mm HIGH x 18mm FROM HINGE IN DOOR EDGE
10mm HIGH x 32mm FROM HINGE IN DOOR FACE

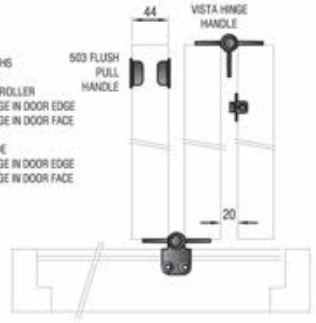

PLAN OF DOORS SHOWING TOP GUIDE

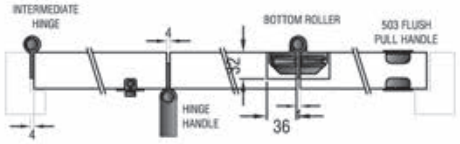

PLAN OF DOORS SHOWING BOTTOM ROLLER

CALCULATIONS - UNEVEN PANEL - 3; 5; 7
Where:
PW = Panel Width
OW = Opening Width
P = No. of Panels
TF = Thickness of Frame

CALCULATIONS - UNEVEN PANEL - 3; 5; 7

For an opening using sinkless hinges:
A 4mm gap between panels is allowed for and a 7mm gap between the hinge leaf and the jamb to accomodate the lock.

$$\text{Panel Width (PW)} = \frac{OW - (2xTF) - (Px4) - 7}{P}$$

For an opening using butt hinges:
A 8mm gap between panels is allowed for and a 7mm gap between the hinge leaf and the jamb to accomodate the lock.

$$\text{Panel Width (PW)} = \frac{OW - (2xTF) - (Px8) - 7}{P}$$

3 LEAVES FOLDING TO ONE SIDE

PLAN OF DOORS SHOWING TOP GUIDE

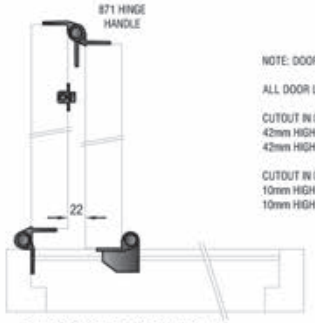

PLAN OF DOORS SHOWING BOTTOM ROLLER

NOTE: DOOR STILES MIN 650mm WIDE

ALL DOOR LEAVES EQUAL WIDTHS

CUTOUT IN DOOR FOR BOTTOM ROLLER
42mm HIGH x 43mm FROM HINGE IN DOOR EDGE
42mm HIGH x 32mm FROM HINGE IN DOOR FACE

CUTOUT IN DOOR FOR TOP GUIDE
10mm HIGH x 32mm FROM HING IN DOOR EDGE
10mm HIGH x 21mm FROM HINGE IN DOOR FACE

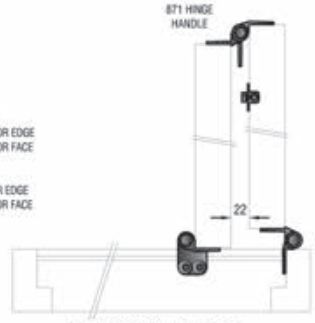

PLAN OF DOORS SHOWING TOP GUIDE

PLAN OF DOORS SHOWING BOTTOM ROLLER

CALCULATIONS - EVEN PANEL - 2;4
Where:
PW = Panel Width
OW = Opening Width
P = No. of Panels
E = No. of End Panels
TF = Thickness of Frame
10mm clearance to allow kick of doors

2 LEAVES FOLDING TO ONE SIDE

CALCULATIONS - EVEN PANEL - 2;4

For an opening using cranked hinges and all doors of even width:

$$PW = \frac{OW - (2xTF) - (Px4) - 5}{P}$$

For an opening using non-cranked hinges where the end door is 12mm longer:

$$PW = \frac{OW - (2xTF) - (Px4) - 5 - (12xE)}{P}$$

Once you have PW for the non-cranked formula, simply add back 12mm to each end panel to determine its width.

B	DOM	COM		S/FIT	HOS	HOT	W/P	SF 12.2

Vistafold™ 30TU

Bottom rolling sliding and folding hardware for weather resistant timber windows.

Features

- Fully rebated frame and sashes for weather resistance
- equal sized sashes
- smooth operation
- non-corrosive hardware

Specifications

Max sash mass: 30kg
Max sash height: 1500mm
Max sash width: 600mm
Sash thickness: 32mm
Recommended: 3 or max 5 sashes hinged together and to the frame, folding either way.

The area of a single sliding leaf should be related to all other factors.

Components

- 21A Aluminium or 21B brass guide channel
- 233x6 Top guide (NA/GA)
- 233x4 Bottom roller (NA/GA)
- 233x1 Hinge (NA/GA)
- 814A Aluminium or 814LB brass bottom track
- 503NA/GA Flush pull handle
- 442B Brass butt hinge
- 443A Aluminium or 443B brass butt hinge
- 452 Holdback catch
- 455 Roller catch
- 488x150mm Flush bolt
- 86SKH Hinge handle

NOTE:
- All fittings available in stainless steel for all coastal applications.
- Various finishes available.
- Available in butt hinges only.
- Various finishes available.

For specialist projects contact:

Hillaldam
SLIDING DOOR SYSTEMS

South Africa: +27 11 626 1001
www.hillaldam.com

Sliding / folding door systems
(Domestic, Commercial, Shop fitting, Hospital, Industrial)

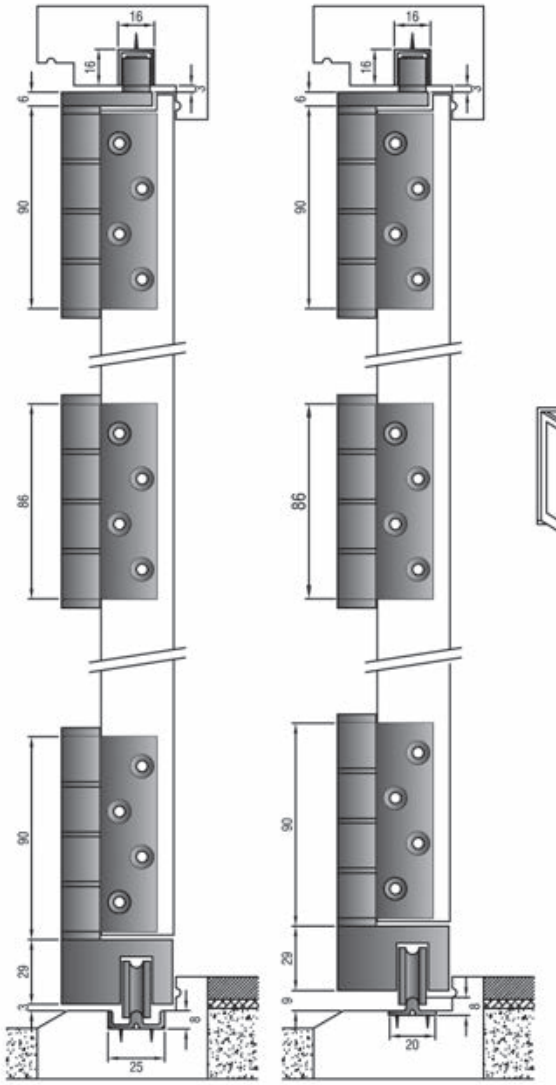

SECTION THROUGH DOOR AT ROLLER AND GUIDE WITH 815B BRASS TRACK SCALE 1:3

SECTION THROUGH DOOR AT ROLLER AND GUIDE WITH 814B BRASS TRACK SCALE 1:3

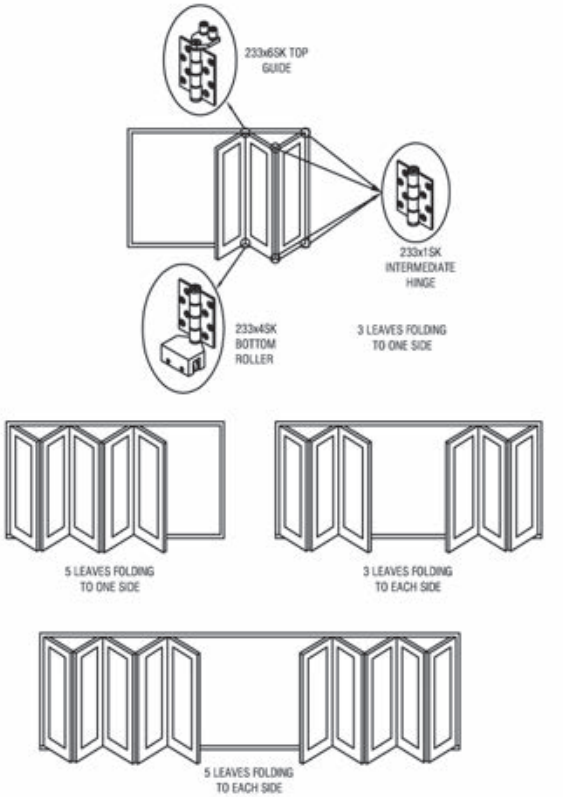

Mechanism

B	DOM			S/FIT			W/R	SF 13.1

3 LEAVES FOLDING TO ONE SIDE

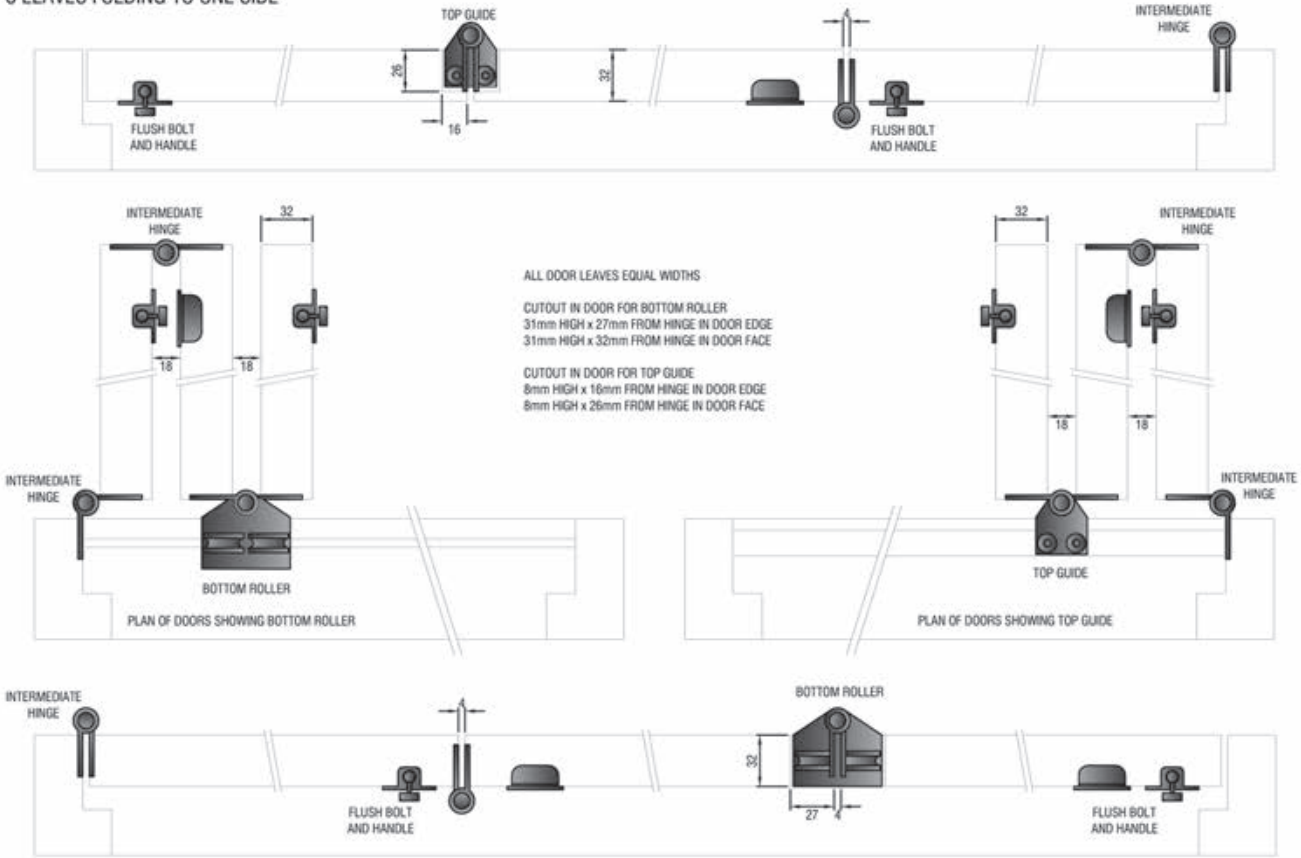

B	DOM			S/FIT			W/P	SF 13.2

Multifold 30E

Top hung, end folding hardware for interior timber or aluminium doors.

Features

- Galvanised or stainless steel ball-bearing hangers
- Equal width door leaves
- For doors or serving hatches

Specifications

Max leaf mass: 30kg
Max leaf height: 2400mm
Max leaf width: 600mm
Leaf thickness: 32-44mm
Recommended: 2 or 4 leaves hinged together and to an end pivot. For 2 leaves, bottom guiding is optional. For 4 leaves, bottom guiding is recommended. No swing leaves.

The area of a single sliding leaf should be related to all other factors.

Components

- 100S Steel or 100A aluminium top track
- 100MF Hangers
- 40/21N Guides
- 21A Aluminium channel
- MF Pivot set
- 503NA/GA Flush pull handle
- 442S or 442B Butt hinged
- 452 Holdback catch
- 455 Roller catch
- 488x150mm Flush bolt

NOTE:
- All fittings available in stainless steel for all coastal applications.
- Various finishes available.

For specialist projects contact:

Hillaldam
SLIDING DOOR SYSTEMS

South Africa: +27 11 626 1001
www.hillaldam.com

Sliding / folding door systems
(Domestic, Commercial, Shop fitting, Hospital, Industrial)

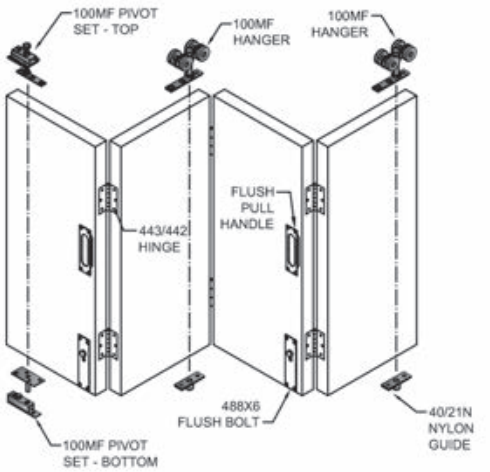

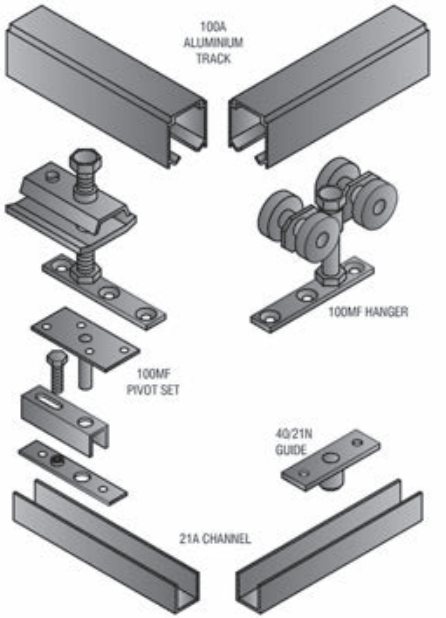

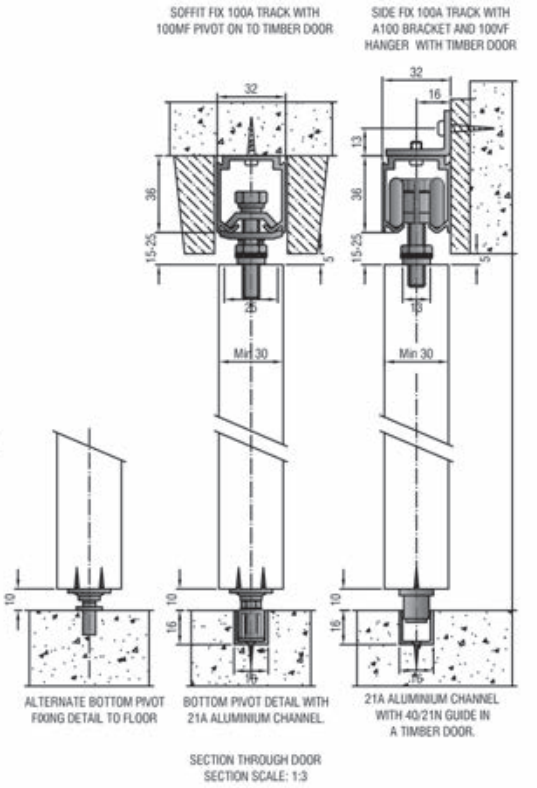

Mechanism

T	DOM			S/FIT	HOS	HOT		SF 14.1

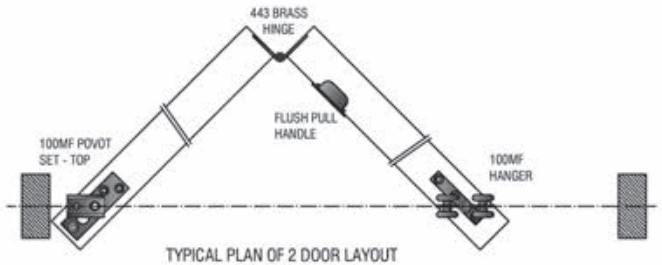

TYPICAL PLAN OF 2 DOOR LAYOUT

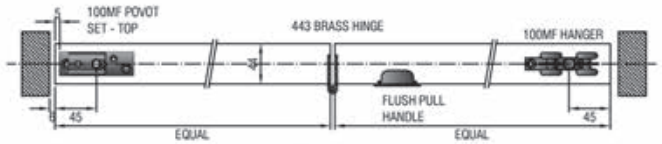

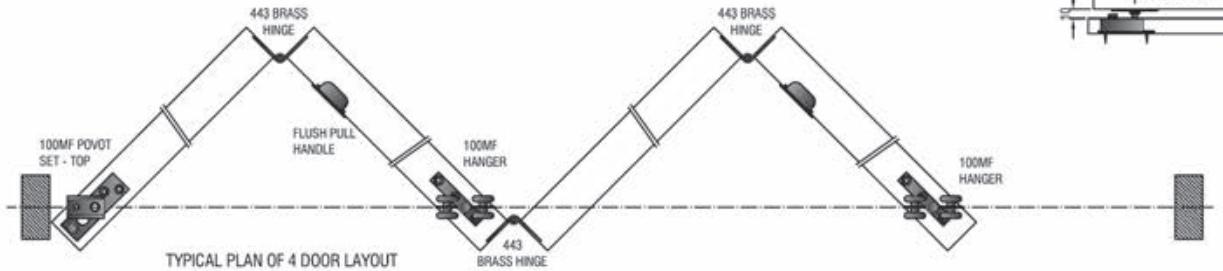

TYPICAL PLAN OF 4 DOOR LAYOUT

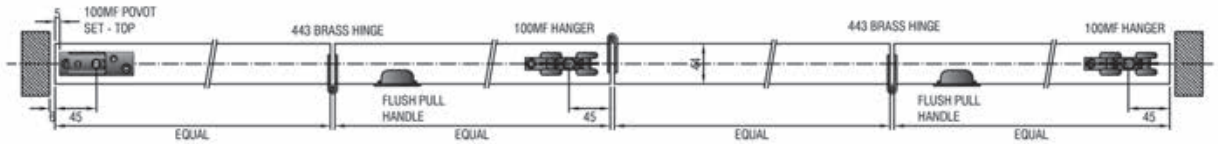

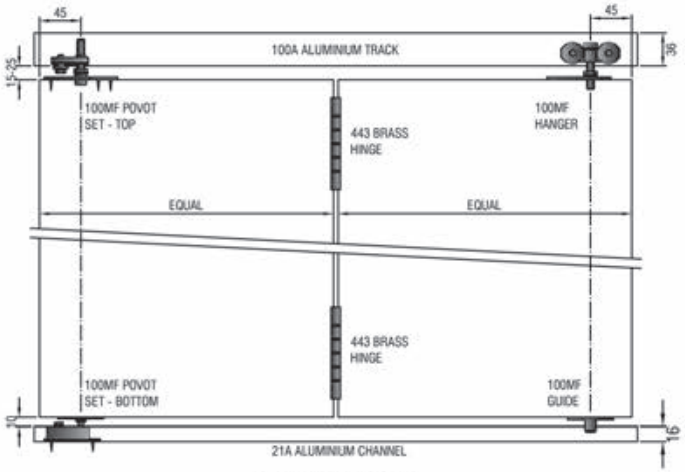

ELEVATION OF TYPICAL
2 DOOR LAYOUT

T	DOM			S/FIT	HOS	HOT		SF 14.2

Hillaldam
SLIDING DOOR SYSTEMS
South Africa: +27 11 626 1001
www.hillaldam.com

Multifold 30E

Multifold 30C

Top hung, centre folding hardware for interior timber or aluminium doors.

Features

- Galvanised or stainless steel ball-bearing hangers
- For doors or serving hatches

Specifications

Max leaf mass: 30kg
Max leaf height: 2400mm
Max leaf width: 800mm
Leaf thickness: 32-44mm
Recommended: 1½, 2½, 3½, 4½, 5½, 6½ or max 7½ leaves hinged together and to an end pivot.
Bottom guiding is recommended for stability.
No swing leaves.

The area of a single sliding leaf should be related to all other factors.

Components

- 100S Steel or 100A aluminium top track
- 100MF Hangers
- 40/21N Guides
- 21A Aluminium channel
- MF Pivot set
- 503NA Flush pull handle
- 442S or 442B Butt hinge
- 452 Holdback catch
- 455 Roller catch
- 488x6 Flush bolt

NOTE:
- All fittings available in stainless steel for all coastal applications.
- Various finishes available.

For specialist projects contact:

Hillaldam
SLIDING DOOR SYSTEMS

South Africa: +27 11 626 1001
www.hillaldam.com

Sliding / folding door systems
(Domestic, Commercial, Shop fitting, Hospital, Industrial)

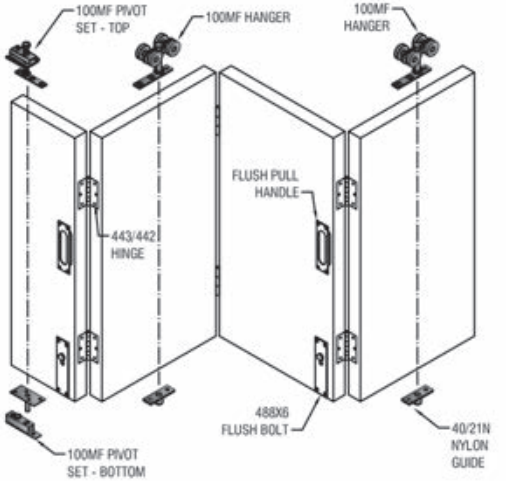

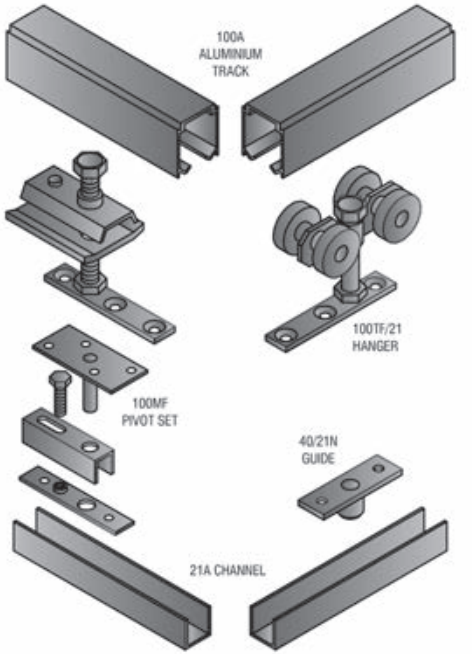

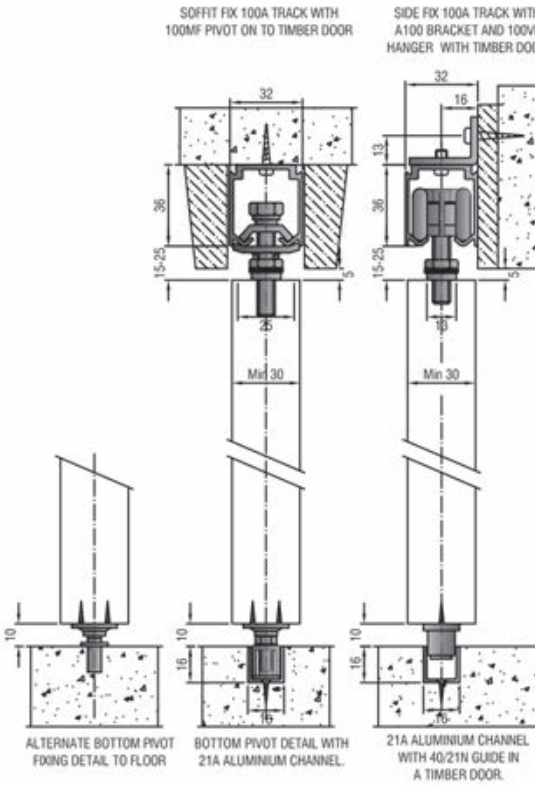

Mechanism

T	DOM			S/FIT	HOS	HOT		SF 15.1

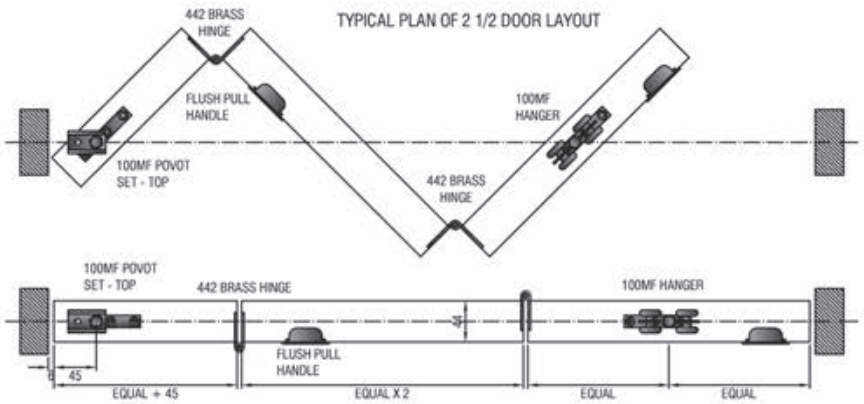

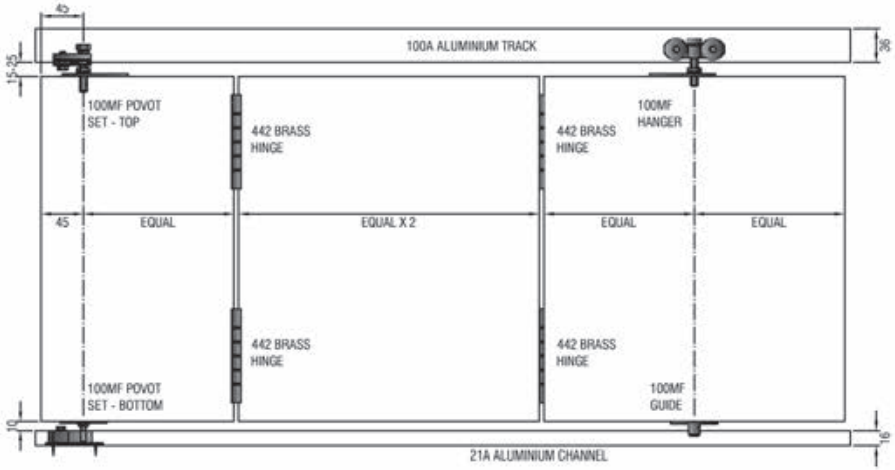

ELEVATION OF TYPICAL
2 1/2 DOOR LAYOUT

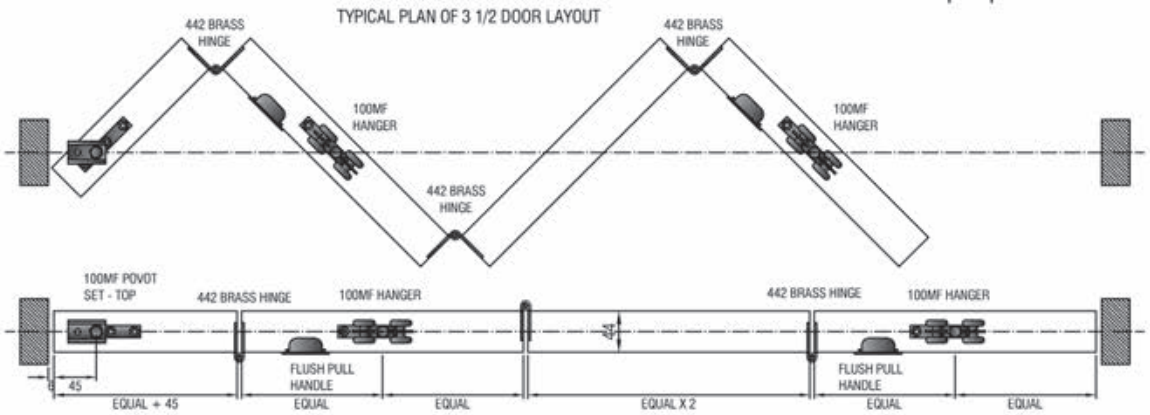

T	DOM			S/FIT	HOS	HOT		SF 15.2

Hillaldam
SLIDING DOOR SYSTEMS

South Africa: +27 11 626 1001
www.hillaldam.com

Multifold 30C

Vistafold™ Mullion

Heavy duty bottom rolling sliding and folding hardware for timber doors in a rebated frame.

Features

- Fully weatherproof system (tested to AAAMSA A1)
- Equal width leaves
- Quality proven hardware
- Uses standard aluminium shopfront door profiles
- Non corrosive hardware

Specifications

Hardware fits standard 44mm shopfront door profiles with Vistafold frames
Max leaf mass: 90kg
Max leaf height: 3500mm
Max leaf width: 900mm
Recommended: 3,5 or max 7 leaves hinged together.

The area of a single sliding leaf should be related to all other factors.

Components

- 3/5/7 LEAF: VMx6 Top guides
  VMx4 Bottom rollers
  868x1 Intermediate hinges
  VSKH Hinge handle
- FITTINGS: VF01 Side frame
  VF02 Top frame
  VF03 Bottom frame
  VM Heavy duty Mullion
  868B Bubble seal
  DO90 Woolpile
  477L/FR Double throw flush bolt
  EB1 Holdback catch
  503NA/GA Flush pull handle

NOTE:
- All fittings suitable for coastal applications.
- Available in natural, white, black & bronze.
- Various finishes available.

For specialist projects contact:

Hillaldam
SLIDING DOOR SYSTEMS

South Africa: +27 11 626 1001
www.hillaldam.com

Sliding / folding door systems
(Domestic, Commercial, Shop fitting, Hospital, Industrial)

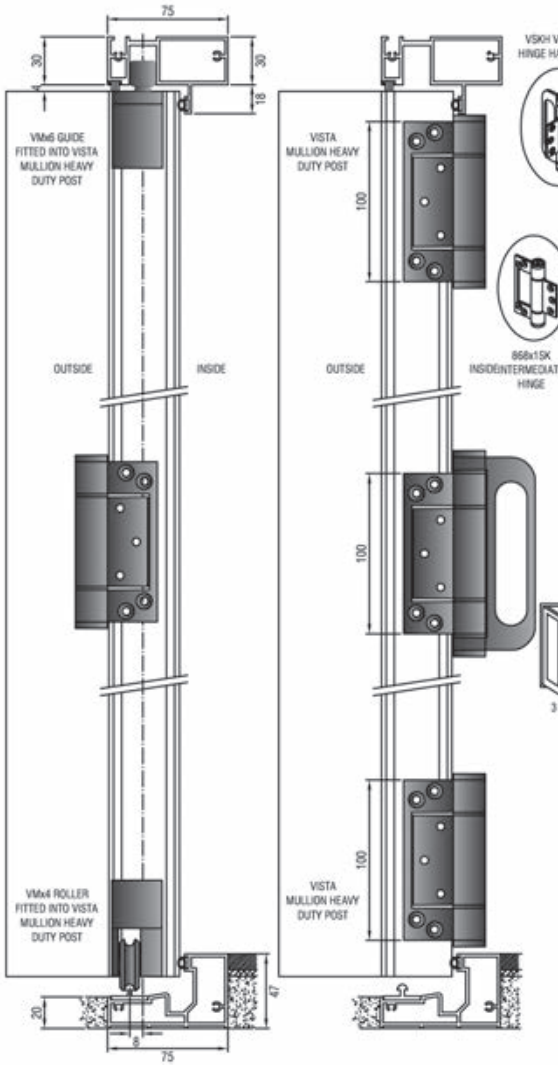

SECTION THROUGH DOOR AT ROLLER AND GUIDE. SCALE 1:4

SECTION THROUGH DOOR AT HINGE HANDLE SCALE 1:4

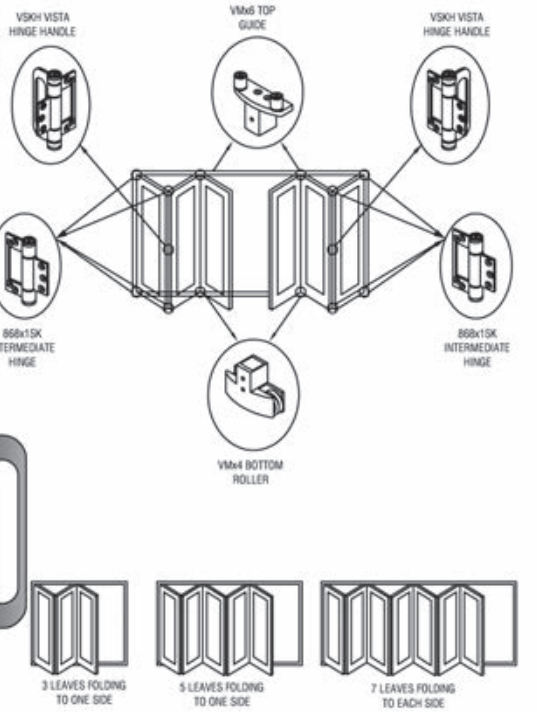

Mechanism

T	DOM	COM		S/FIT	HOS	HOT	W/R	SF 16.1

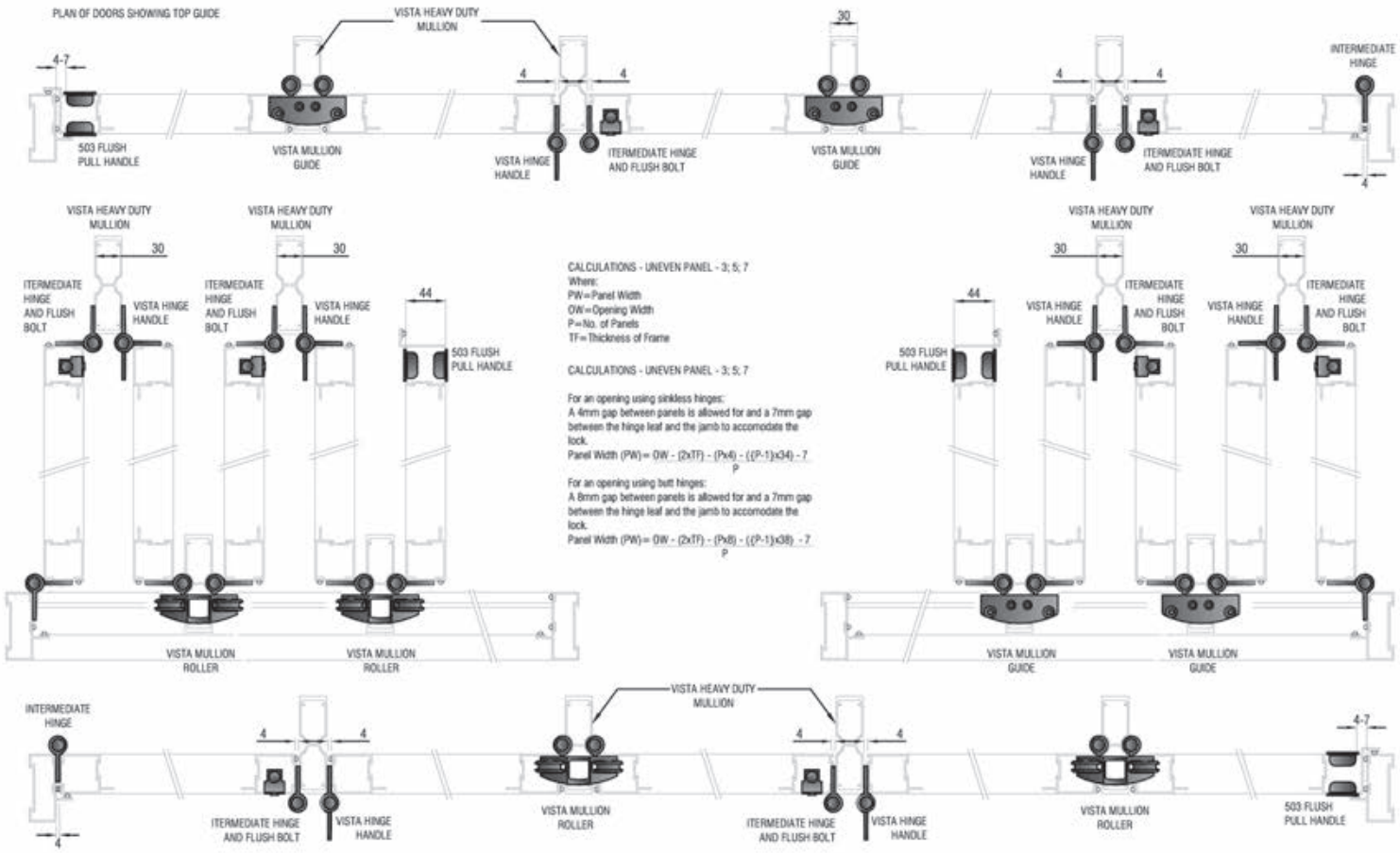

5 LEAVES FOLDING TO ONE SIDE

B	DOM	COM		S/FIT	HOS	HOT	W/R	SF 16.2

Hillaldam SLIDING DOOR SYSTEMS
South Africa: +27 11 626 1001
www.hillaldam.com

Vistafold™ Mullion

Sliding Stacking Systems

Stackaway 100

Top hung sliding and stacking hardware for aluminium and timber doors.

Features

- No floor channel required
- Aluminium top track
- Non-corrosive hardware
- Clip-on rebate
- Flexible layout designs

Specifications

Max leaf mass: 100kg
Max leaf height: 2400mm
Max leaf width: 1000mm
Leaf thickness: 44mm

The area of a single sliding leaf should be related to all other factors.

Components

- 356 Aluminium top track
- 356PA Clip-on rebate (optional)
- 356TP/A Hanger for aluminium door or 356TP/T Hanger for timber door
- 356 Stacking rig – to suit layout
- 503NA/GA Flush pull handle
- 477L Flush bolt and 9139 sprung keep (aluminium doors)
- 488x150 Flush bolt (timber doors)
- 356P Pivot set for pivot leaf
- 122 Brush welt
- Woolpile for clip-on rebate

NOTE:

- All fittings available in stainless steel for all coastal applications.
- Various finishes available.

For specialist projects contact:

Hillaldam
SLIDING DOOR SYSTEMS

South Africa: +27 11 626 1001
www.hillaldam.com

Sliding / folding door systems
(Domestic, Commercial, Shop fitting, Hospital, Industrial)

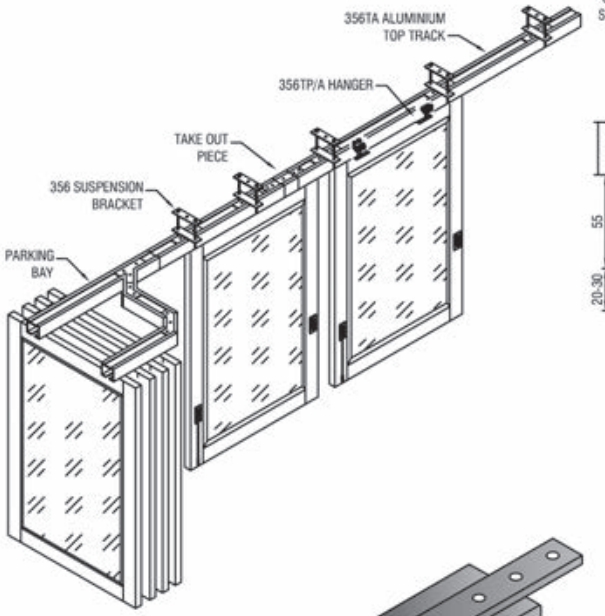

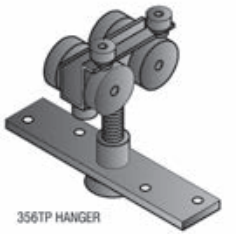

356TP HANGER

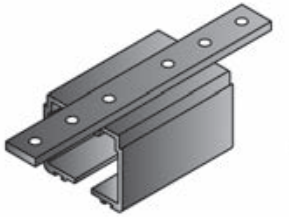

356 TAKE-OUT PIECE

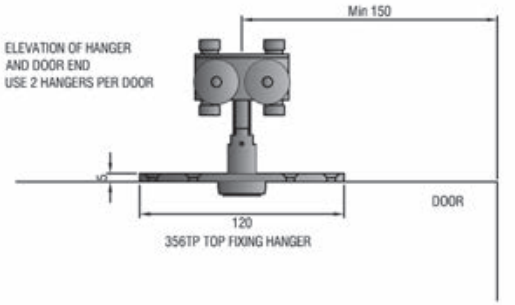

356TP TOP FIXING HANGER

SOFFIT FIX 356TA TRACK WITH TOP SUSPENSION BRACKET AND 356TP/T HANGER WITH TIMBER DOOR

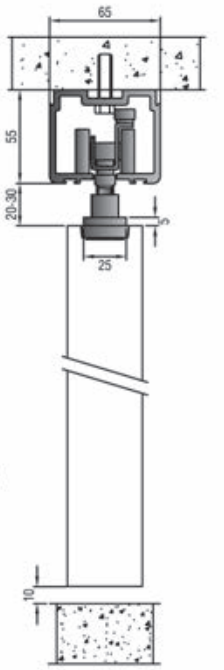

SOFFIT FIX 356TA TRACK WITH TOP SUSPENSION BRACKET AND 356TP/A HANGER WITH ALUMINIUM DOOR. PELMET USED ON 45DEG STACK ONLY

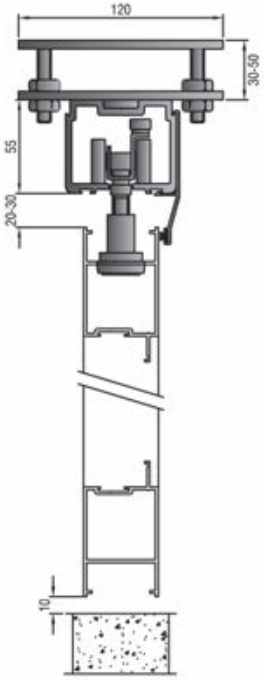

SECTION THROUGH DOORS
SECTION SCALE: 1:4

Mechanism

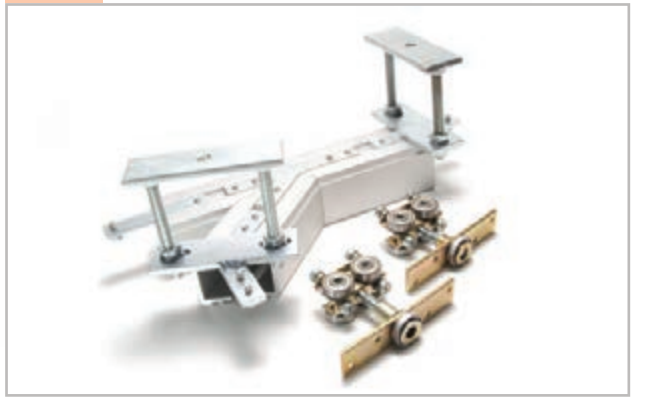

T	DOM	COM		S/FIT				SS 1.1

STACKING LAYOUTS

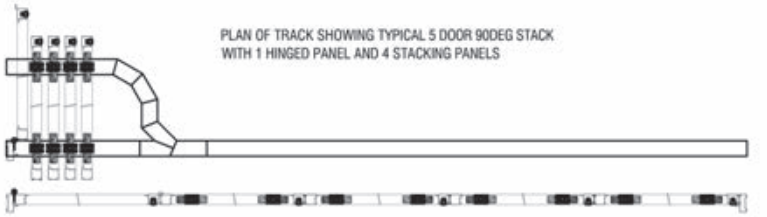

PLAN OF TRACK SHOWING TYPICAL 5 DOOR 90DEG STACK
WITH 1 HINGED PANEL AND 4 STACKING PANELS

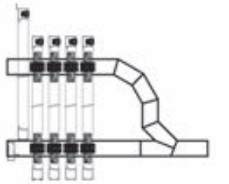

90DEG STACK - LH/RH

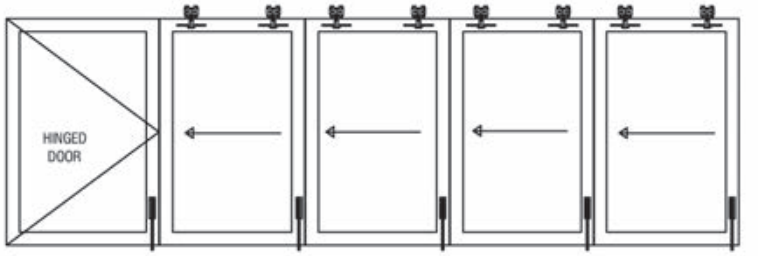

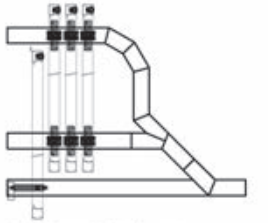

90DEG CRANKED STACK - LH/RH

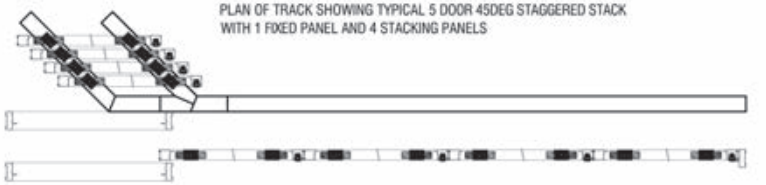

PLAN OF TRACK SHOWING TYPICAL 5 DOOR 45DEG STAGGERED STACK
WITH 1 FIXED PANEL AND 4 STACKING PANELS

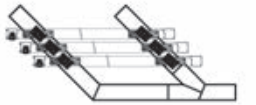

45DEG STAGGERED STACK - LH/RH

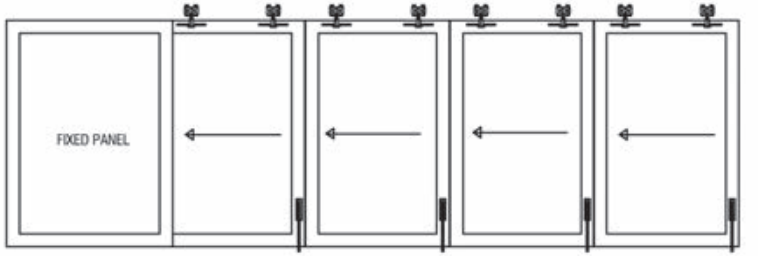

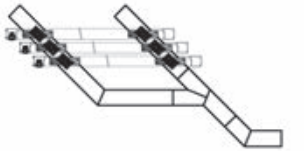

45DEG CRANKED STAGGERED STACK - LH/RH

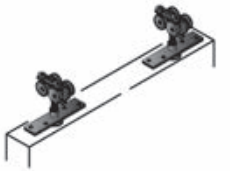

HANGER POSITIONED ON
DOOR END WITH GUIDE
ROLLERS ON OPPOSITE SIDES
TO ALLOW DOORS TO STACK

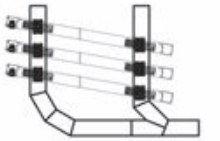

PARALLEL EVEN STACK - LH/RH

For specialist projects contact:
Hillaldam
SLIDING DOOR SYSTEMS

South Africa: +27 11 626 1001
www.hillaldam.com

Stackaway 100

T	DOM	COM		S/FIT				SS 1.2

Stackaway 100GL

Top hung sliding and stacking hardware for frameless glass doors.

Features

- No floor channel required
- Aluminium top track
- Slim rail with glass bolt-through
- Flexible layout designs

Specifications

Max leaf mass: 100kg
Max leaf height: 2400mm
Max leaf width: 1000mm
Glass: Tempered 10 or 12mm
(15mm option available)
Special layouts done by Hillaldam

The area of a single sliding leaf should be related to all other factors.

Components

- 356 Aluminium top track
- GL Rail
- GL Top and bottom rail with cover plates
- GL End caps
- 356GL Hangers
- 356 Stacking rig – to suit layout
- 122 Brush only
- DRL5025 Rail lock
- 356PGL Pivot set for pivot leaf
- GL2 Slide bolt

NOTE:

- All fittings available in stainless steel for all coastal applications.
- Various finishes available.

For specialist projects contact:

Hillaldam
SLIDING DOOR SYSTEMS

South Africa: +27 11 626 1001
www.hillaldam.com

Sliding / folding door systems
(Domestic, Commercial, Shop fitting, Hospital, Industrial)

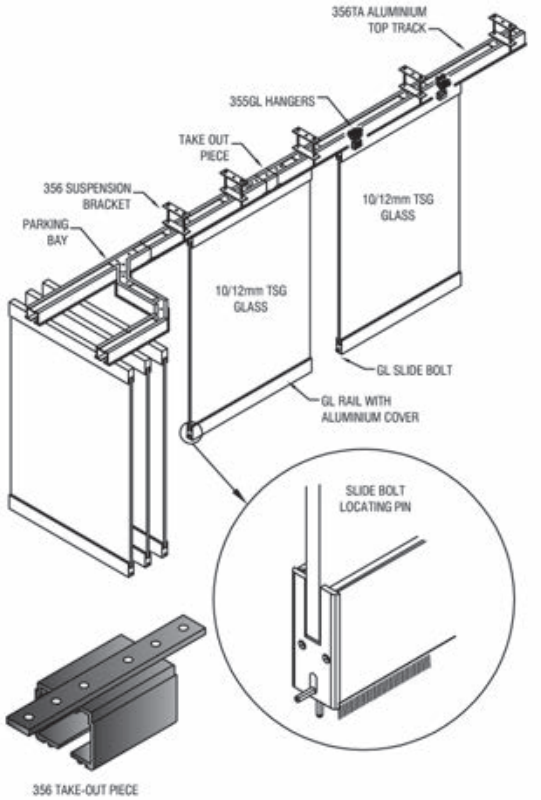

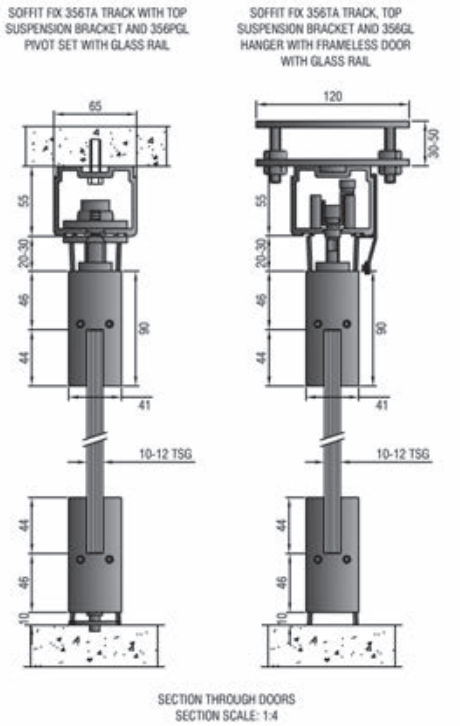

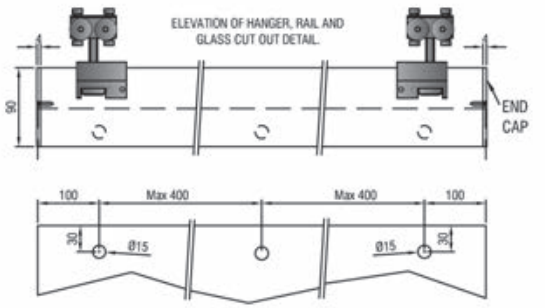

Mechanism

T	DOM	COM		S/FIT				SS 2.1

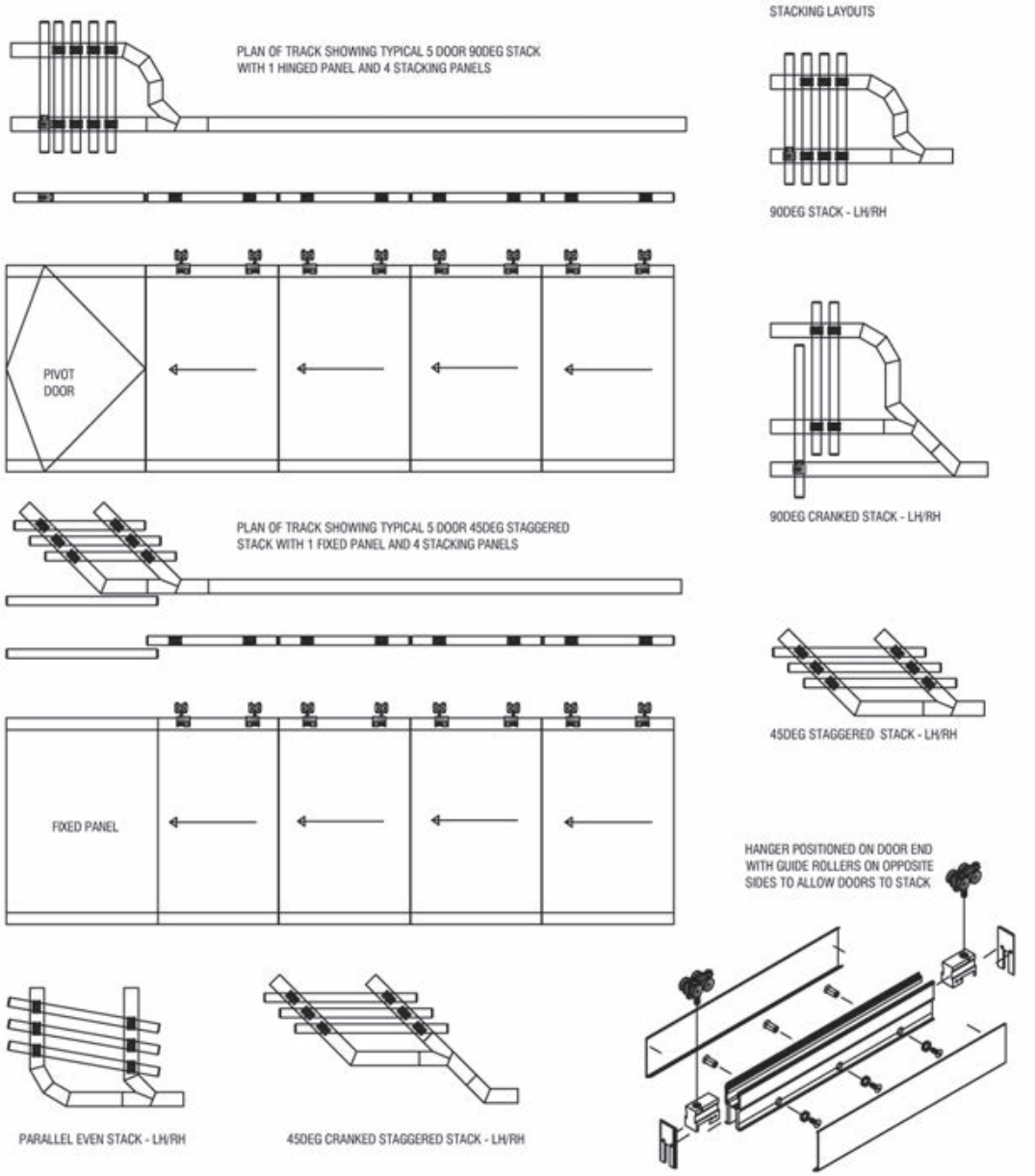

For specialist projects contact:

Hillaldam
SLIDING DOOR SYSTEMS

South Africa: +27 11 626 1001
www.hillaldam.com

Stackaway 100GL

T	DOM	COM		S/FIT				SS 2.2

Stackaway 150

Top hung sliding and stacking hardware for aluminium and timber doors.

Features

- No floor channel required
- Aluminium top track
- Tough proven hardware
- Flexible layout designs

Specifications

Max leaf mass: 150kg
Max leaf height: 3500mm
Max leaf width: 1200mm
Leaf thickness: 44-60mm
Special layouts done by Hillaldam

The area of a single sliding leaf should be related to all other factors.

Components

- 600TA Aluminium top track
- 600TF Hangers
- 655 Stacking rig – to suit layout
- 503NA/GA Flush pull handle
- 477L Flush bolt and 9139 sprung keep (aluminium doors)
- 9139 Sprung keep (aluminuim doors)
- 488x150 Flush bolt (timber doors)
- 122 Brush welt
- 655P Pivot set for pivot leaf

NOTE:
- All fittings available in stainless steel for all coastal applications.
- Various finishes available.

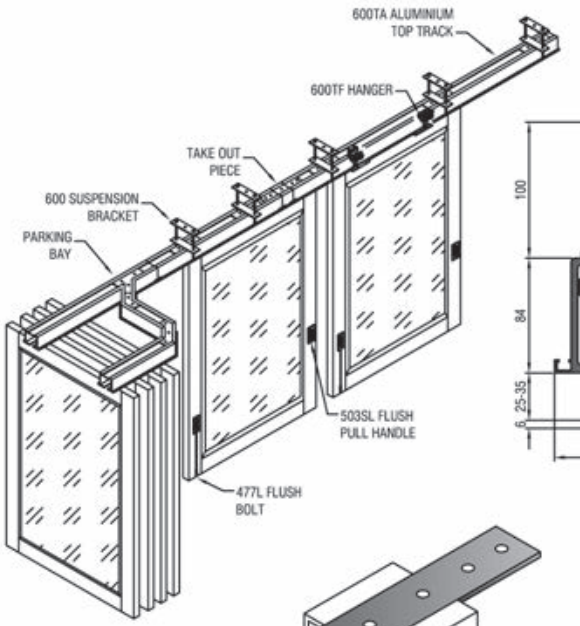

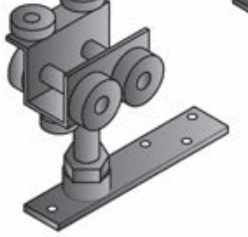

600TF HANGER

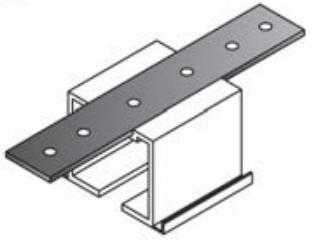

600 TAKE-OUT PIECE

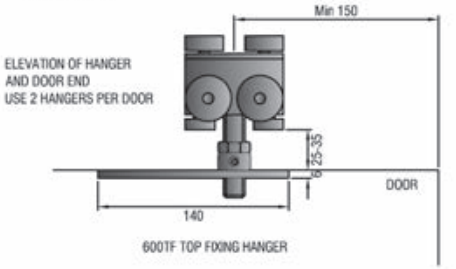

600TF TOP FIXING HANGER

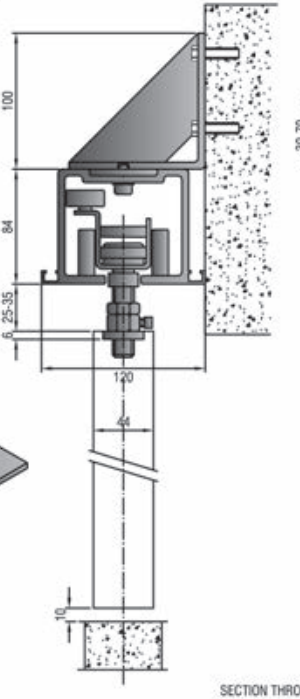

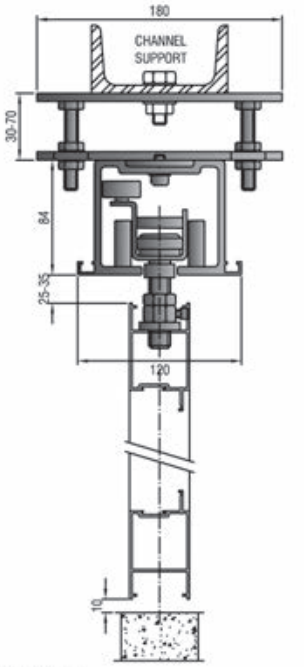

SECTION THROUGH DOORS
SECTION SCALE: 1:5

Mechanism

T	DOM	COM		S/FIT		HOT		SS 3.1

For specialist projects contact:

Hillaldam
SLIDING DOOR SYSTEMS

South Africa: +27 11 626 1001
www.hillaldam.com

Sliding / folding door systems
(Domestic, Commercial, Shop fitting, Hospital, Industrial)

STACKING LAYOUTS

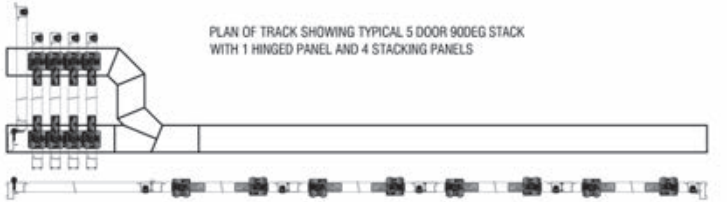

PLAN OF TRACK SHOWING TYPICAL 5 DOOR 90DEG STACK WITH 1 HINGED PANEL AND 4 STACKING PANELS

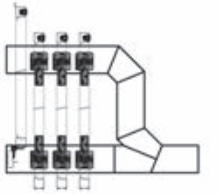

90DEG STACK - LH/RH

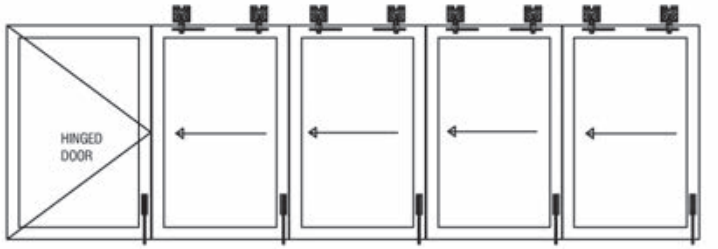

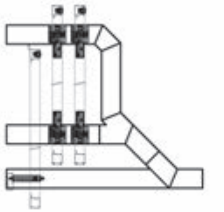

90DEG CRANKED STACK - LH/RH

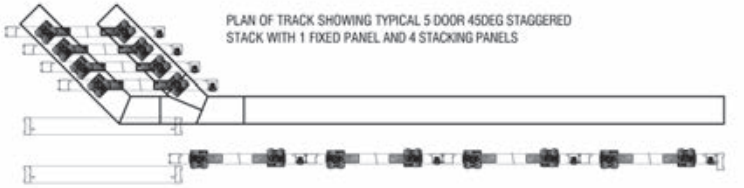

PLAN OF TRACK SHOWING TYPICAL 5 DOOR 45DEG STAGGERED STACK WITH 1 FIXED PANEL AND 4 STACKING PANELS

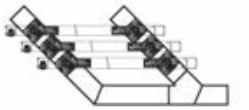

45DEG STAGGERED STACK - LH/RH

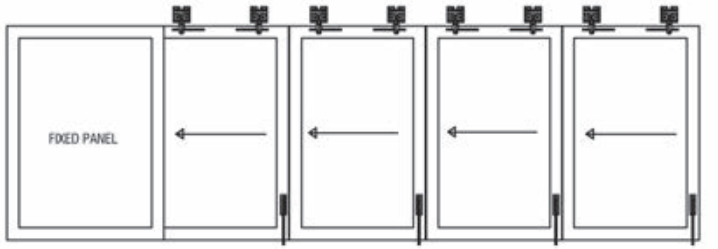

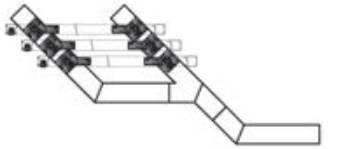

45DEG CRANKED STAGGERED STACK - LH/RH

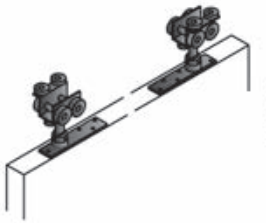

HANGER POSITIONED ON DOOR END WITH GUIDE ROLLERS ON OPPOSITE SIDES TO ALLOW DOORS TO STACK

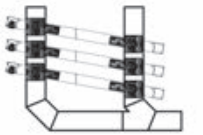

PARALLEL EVEN STACK - LH/RH

For specialist projects contact:

Hillaldam
SLIDING DOOR SYSTEMS

South Africa: +27 11 626 1001
www.hillaldam.com

Stackaway 150

T	DOM	COM		S/FIT		HOT		SS 3.2

Stackaway 150GL

Top hung sliding and stacking hardware for frameless glass doors.

Features

- No floor channel required
- Aluminium top track
- Slim rail with glass bolt-through
- Flexible layout designs

Specifications

Max leaf mass: 150kg
Max leaf height: 3500mm
Max leaf width: 1200mm
Glass: Tempered 10 or 12mm
(15mm option available)
Special layouts done by Hillaldam

The area of a single sliding leaf should be related to all other factors.

Components

- 600TA Aluminium top track
- GL Top and bottom rail with cover plates
- GL End caps
- 600GL Hangers
- 655 Stacking rig – to suit layout
- 122 Brush welt
- DRL5025 Rail lock
- 9139 Sprung keep
- 655PGL Pivot set
- GL2 Slide bolt

NOTE:

- All fittings available in stainless steel for all coastal applications.
- Various finishes available.

For specialist projects contact:

Hillaldam
SLIDING DOOR SYSTEMS

South Africa: +27 11 626 1001
www.hillaldam.com

Sliding / folding door systems
(Domestic, Commercial, Shop fitting, Hospital, Industrial)

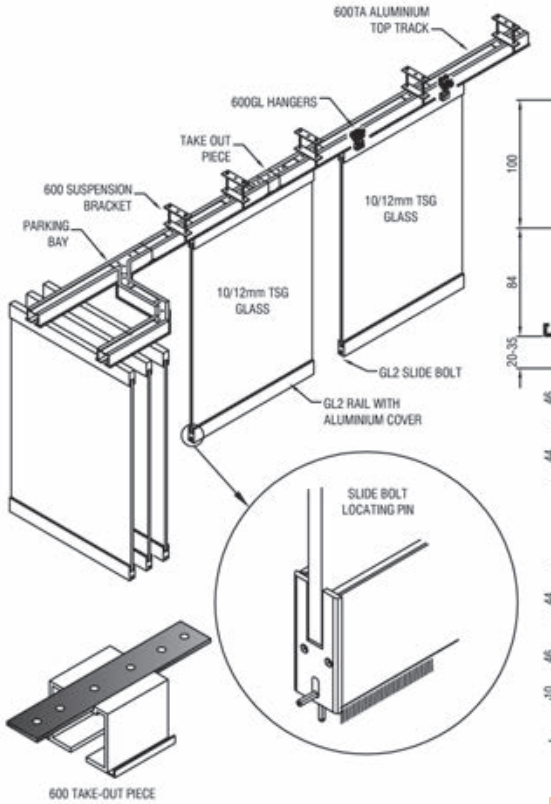

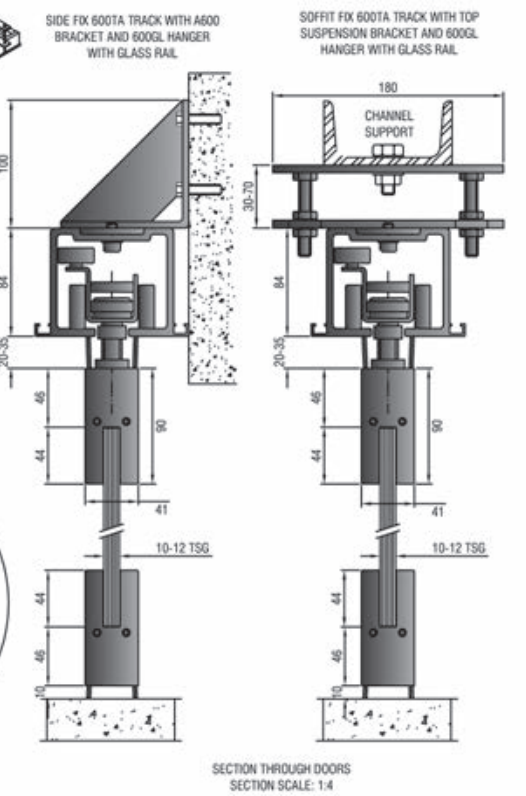

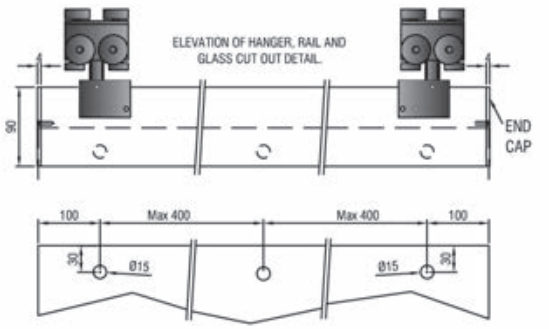

Mechanism

T	DOM	COM		S/FIT		HOT		SS 4.1

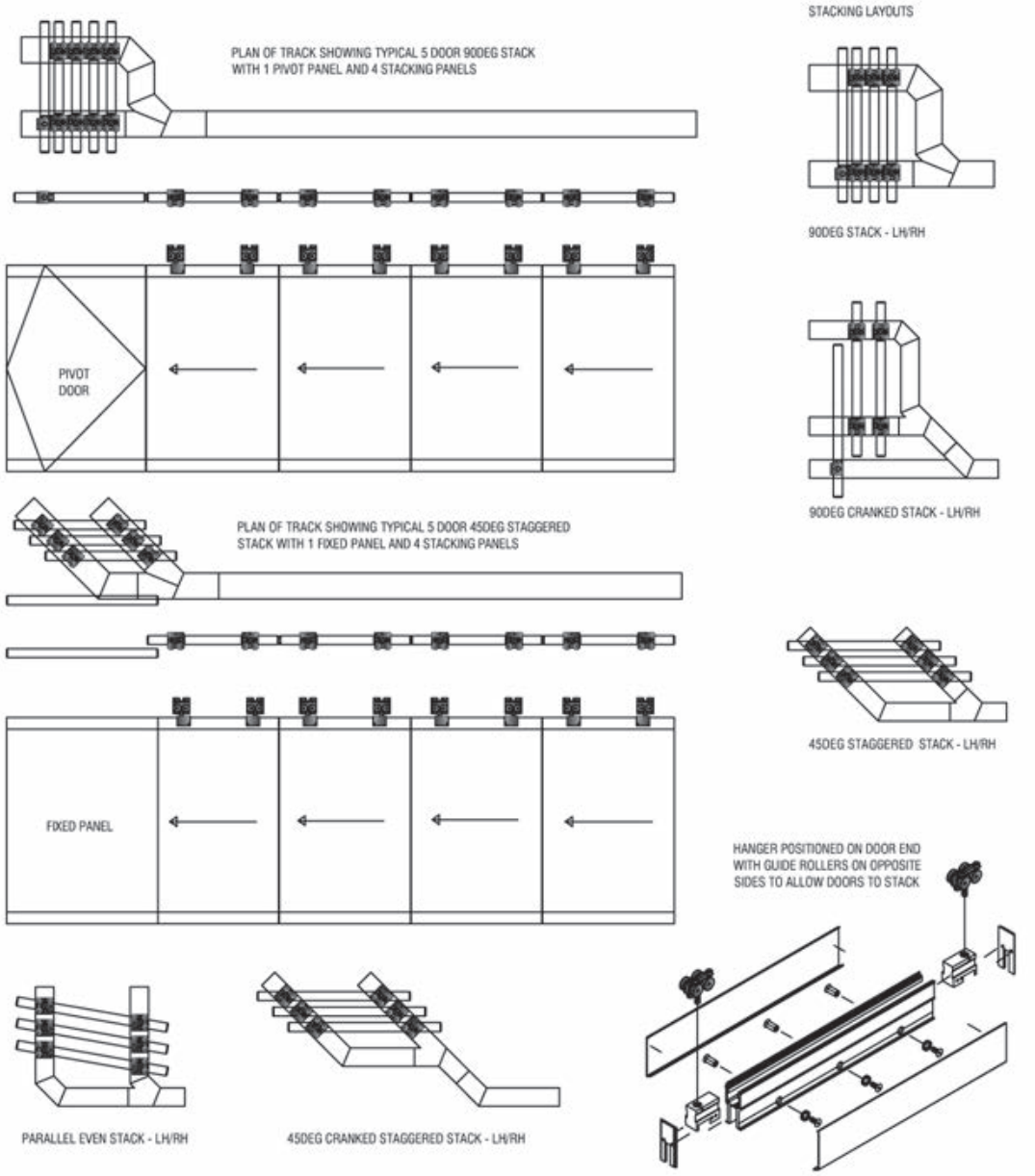

For specialist projects contact:

Hillaldam
SLIDING DOOR SYSTEMS

South Africa: +27 11 626 1001
www.hillaldam.com

Stackaway 150GL

T	DOM	COM		S/FIT		HOT		SS 4.2

Special Systems

SecuriSlide

Tough, durable sliding systems for security gates up to 1200kg.

Features

- Proven system hardware
- Ball bearing rollers
- Strong, maintenance-free sliding gear
- Range of gate loadings and roller profiles
- Alternative top guiding system

Specifications

Max door mass: 200 - 1200kg

The area of a single sliding leaf should be related to all other factors.

Components

Rollers:

- GWR38T/40F – 200kg
- GWR50/60F (Flat) – 400kg
- GWR50/60V (V-groove) – 400kg
- GWR5-/60R (Round) – 400kg
- GWR50/80F (Flat) – 600kg
- GWR50/80 V (V-groove) – 600kg
- GWR50/80R (Round) – 600kg
- GWR50/100V (V-groove) – 1000kg
- GWR50/150V (V-groove) – 1000kg

Guides:

- UD31 Bracket and guide
- PVC Guide
- 810S Channel with fixing bracket and 0831 guide

NOTE:

- Alternate guiding available, please contact Hillaldam for further information.

For specialist projects contact:

Hillaldam SLIDING DOOR SYSTEMS

South Africa: +27 11 626 1001
www.hillaldam.com

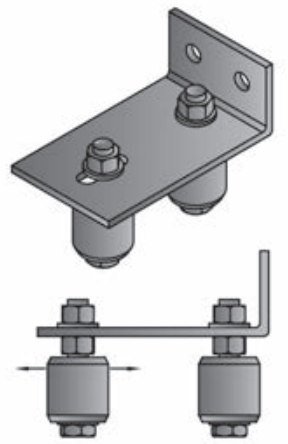

UD31 BRACKET AND GUIDE
30 - 55mm ADJUSTMENT

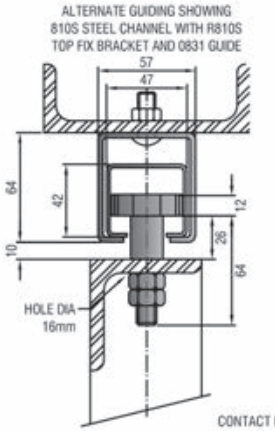

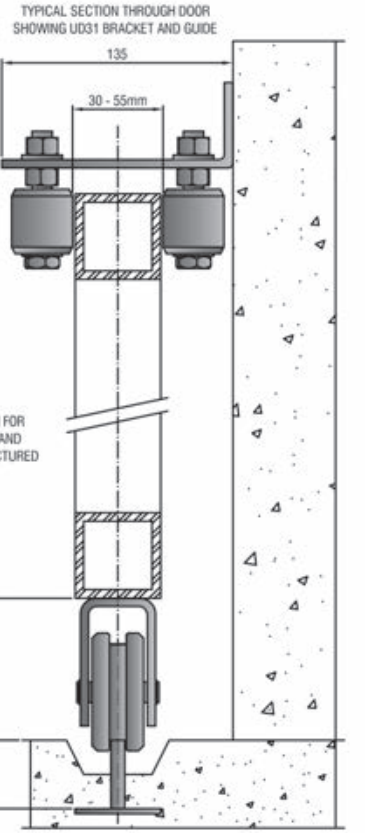

CONTACT HILLALDAM FOR CUSTOM BRACKETS AND GUIDES TO BE MANUFACTURED TO ORDER.

PVC GUIDE

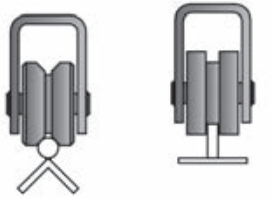

GWR GATE ROLLER AVAILABLE TO SUIT ROUND OR FLAT BAR TRACKS

GWR50/60F BOTTOM ROLLER ON 50x50 SQUARE WITH RECESSED 40B BOTTOM STEEL TRACK

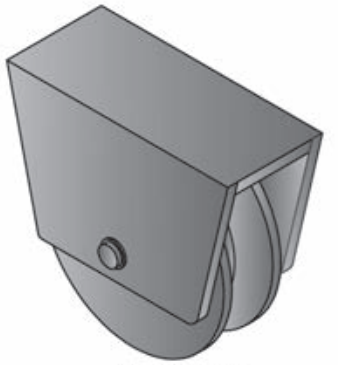

GWR50/150V (V-GROOVE)

1200KG/PR

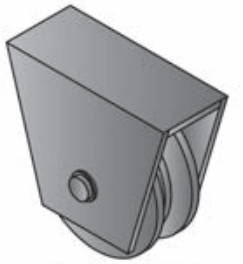

GWR50/100V (V-GROOVE)

1000KG/PR

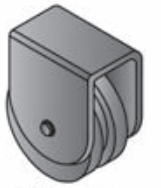

GWR50/80F (FLAT)
GWR50/80V (V-GROOVE)
GWR50/80R (ROUND)
600KG/PR

GWR50/60F (FLAT)
GWR50/60V (V-GROOVE)
GWR50/60R (ROUND)
400KG/PR

GWR38T/40F

200KG/PR

StableSlide

Pace saving sliding door system for horse stables for doors up to 400kg.

Features

- Proven system hardware
- Quality ball-bearing hangers
- Strong, maintenance-free sliding gear
- Extra secure track and guide rail for lateral strength
- No sharp or dangerous edges

The area of a single sliding leaf should be related to all other factors.

Components

Up to 200kg

- A200S Side fixing or R200 top fixing brackets – max 900mm centres
- 200RO Steel or 200G galvanised top track
- 200TF Top fixing or 200AS hangers
- 5012H Wall fix guide rail
- 19S Steel guide channel
- 44x1 Door stop
- 110DP Handle

Up to 400kg

- A460 Side fixing or R460 top fixing brackets – max 900mm centres
- 400RO Steel or 400G/600G galvanised top track
- 460AS Adjustable apron hangers
- 5016 Guide rail
- 25S Steel guide channel
- 44x1 Door stop
- 110DP Handle
- 1S Drop bolt

For specialist projects contact:

Hillaldam SLIDING DOOR SYSTEMS

South Africa: +27 11 626 1001
www.hillaldam.com

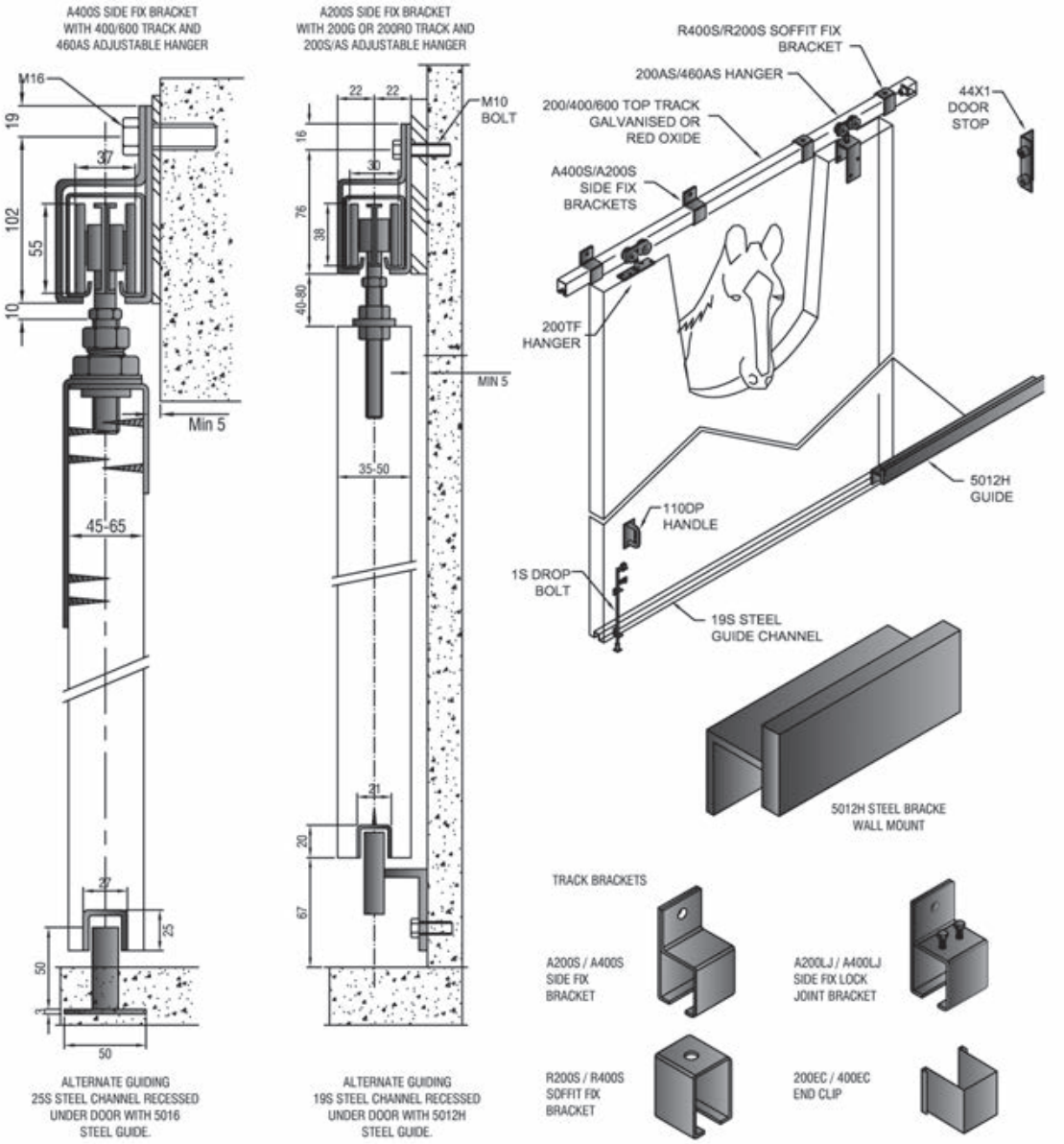

Cantilever Gates

Bottom rolling sliding door hardware for steel gates up to 1800kg.

Cantilever gate systems are designed for applications where sliding gates are required but the installation of a ground track is not possible or desirable.

Features

- Proven system hardware
- Track free thoughfare
- Strong, maintenance-free sliding gear

Specifications

Max door mass: 1800kg
Max door height: 7600mm
Max door width: 23000mm
Door thickness: Min 220mm

The area of a single sliding leaf should be related to all other factors.

Components

- Running track – mounted under the gate
- 2x Bottom support rollers – fixed to concrete base
- 2x End guides – mounted in the running track
- 2x End guide receivers/stops
- 1x Top guide system

NOTE:

- Please contact Hillaldam for the downloadable Cantilever Load Table to denote which system is best suited for you based on gate size and width.

For specialist projects contact:

Hillaldam
SLIDING DOOR SYSTEMS

South Africa: +27 11 626 1001
www.hillaldam.com

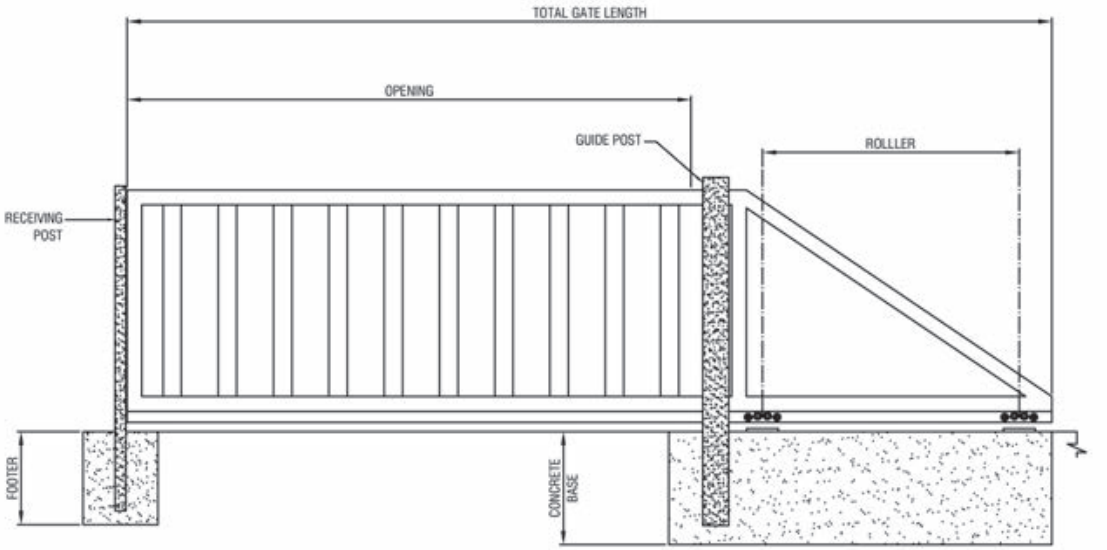

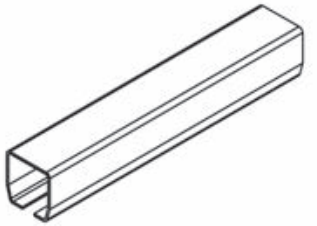

CATNTILEVER TRACK
BLACK/RED OXIDE/GALVANSIED

BRACKET ROLLER GUIDES

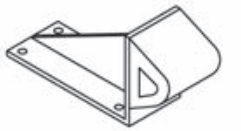

HEAVY DUTY DOOR STOP

LIGHT DUTY ROLLERS

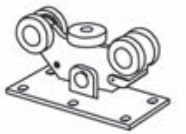

LIGHT DUTY ROLLERS

HEAVY DUTY ROLLERS

Curtainslide

Strong, versatile sliding support system for trailer curtains, industrial tarpaulins and theatre curtains.

Features

- High load steel track
- Steel brackets for wall fixing or welding
- Ball bearing hangers

Specifications

Up to 25kg loading per hanger

Recommended maximum spacing of 450mm

Components

- A200S Side fixing or R200 top fixing bracket – max 900mm centres
- 200RO Steel or 200G galvanised top track
- 128S Hanger with curtain plate
- 129S Hanger
- 100S Steel or 100G glavanised top track
- A100S Side fixing bracket
- 28N Curtain hanger

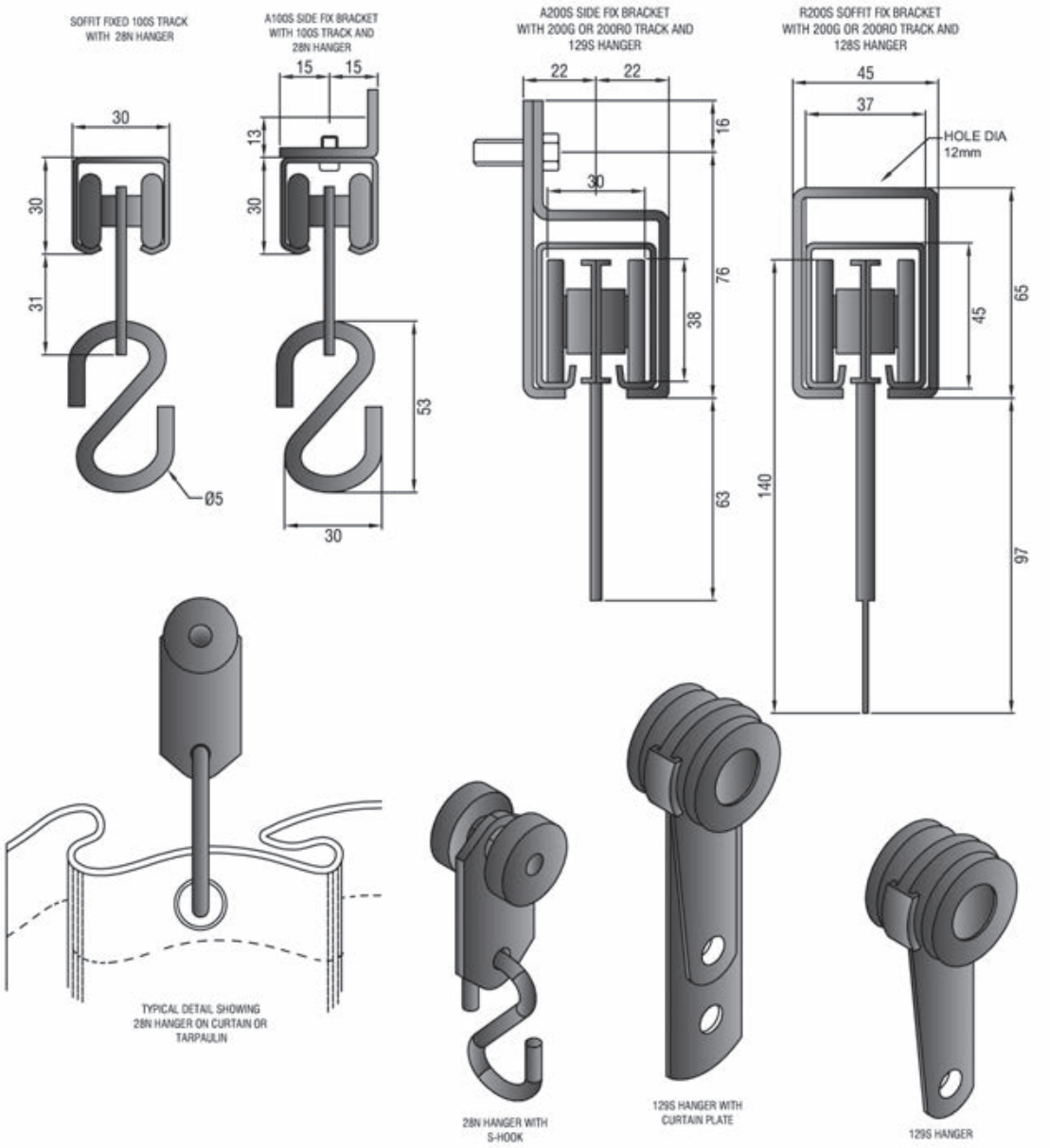

For specialist projects contact:

Hillaldam SLIDING DOOR SYSTEMS

South Africa: +27 11 626 1001
www.hillaldam.com

Safety Slide

Safe and effective harness securing system for gym gear, window cleaning or maintenance workers operating outside tall buildings.

Features

- Fully enclosed track
- High specification track and hanger for maximum vertical and lateral stability
- Easy clip-on harness fixing
- Quality ball-bearing hangers
- Strong, maintenance-free sliding gear

Components

- A460 Side fixing or R460 top fixing brackets – max 900mm centres
- 600G Galvanised top track
- W468 8-wheel hanger

Specifications

Max mass: 215kg

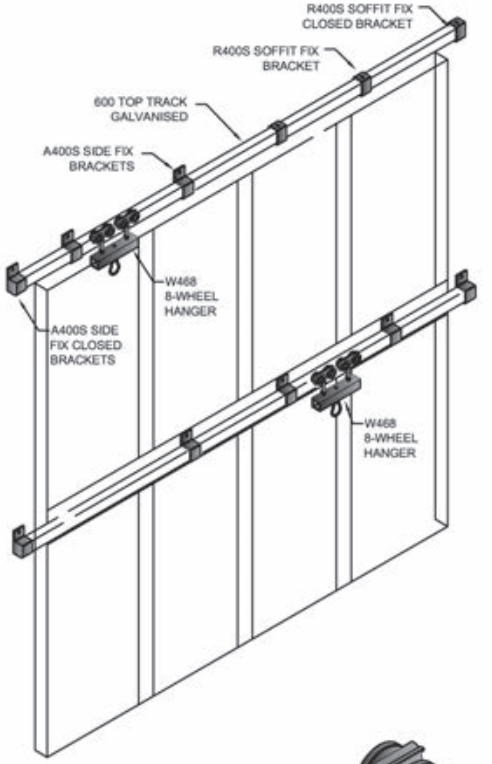

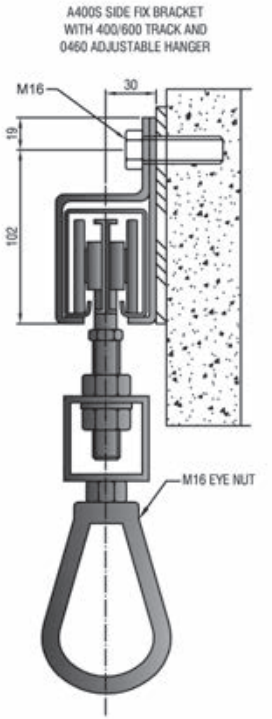

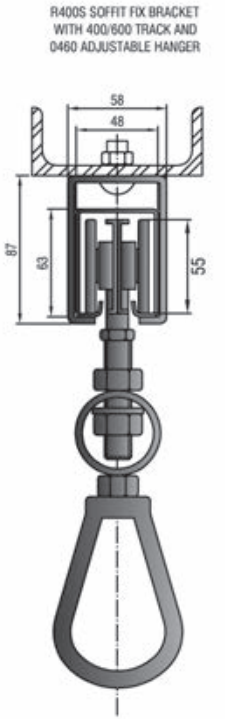

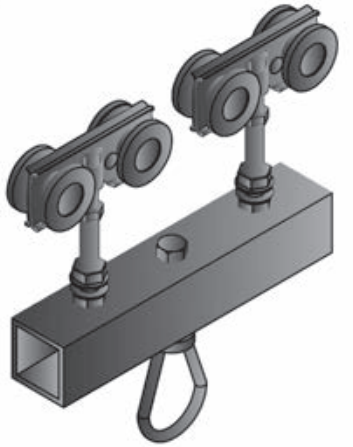

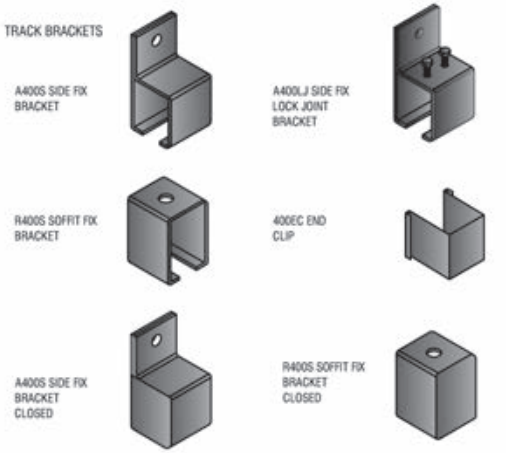

For specialist projects contact:

Hillaldam SLIDING DOOR SYSTEMS

South Africa: +27 11 626 1001
www.hillaldam.com

Runaway

Highly versatile overhead conveyor system for moving goods and feedbins in stables, chicken houses, piggeries etc.

Features

- Proven system hardware
- Quality ball-bearing hangers
- Strong, maintenance-free sliding gear
- Extra secure track and guide rail for lateral strength
- Easy-to-fix connectors for feed trays & carriages

Specifications

Runaway 200

Max mass: 4 Wheel hanger – 40kg
8 Wheel hanger – 75kg

Runaway 400

Max mass: 4 Wheel hanger – 110kg
8 Wheel hanger – 215kg

Components

Up to 200kg

- A200S Side fixing or R200 top fixing brackets – max 900mm centres
- 200RO Steel or 200G galvanised top track
- 0200 – 4 Wheel or 8 wheel hangers with or without eye nut

Up to 400kg

- A460 Side fixing or R460 top fixing brackets – max 900mm centres
- 400RO Steel or 400G/600G galvanised top track
- 0460 – 4 Wheel or 8 wheel hangers with or without eye nut

For specialist projects contact:

Hillaldam SLIDING DOOR SYSTEMS

South Africa: +27 11 626 1001
www.hillaldam.com

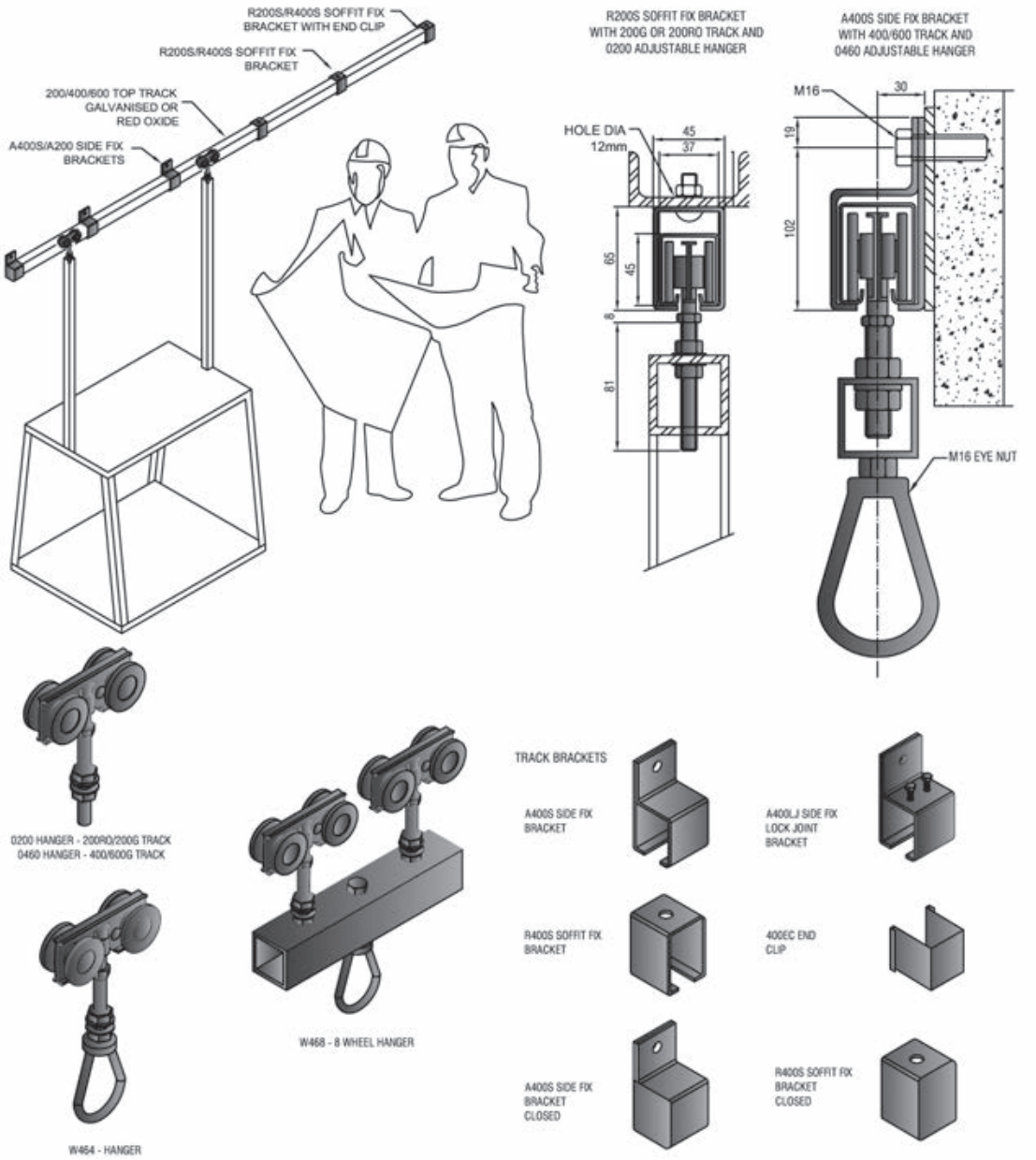

Fittings

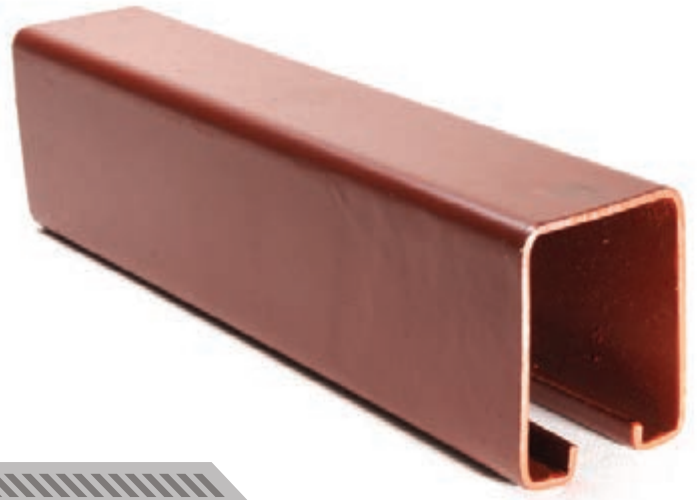

Steel Top Tracks

Cold rolled from mild steel, black or red oxide (RO) or electro galvanised (G).
Hot galvanised available on request.

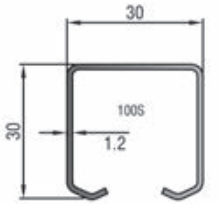

TRACK LENGTHS AND A100 BRACKETS REQUIRED
1.5m - 6 brackets
1.8m - 7 brackets
2.0m - 7 brackets
2.4m - 8 brackets
3.0m - 10 brackets
4.0m - 15 brackets

TRACK LENGTHS AND 200/400/600/1000 BRACKETS REQUIRED

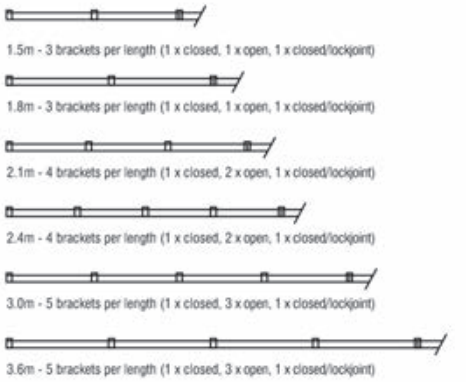

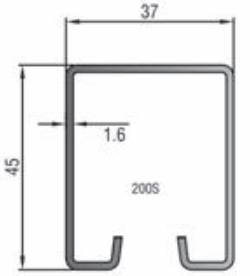

200S, 400S, 600S & 1000S TRACK LENGTHS
1.5m; 1.8m; 2.1m; 2.4m; 3m; 3.6m; 6m; 7.2m

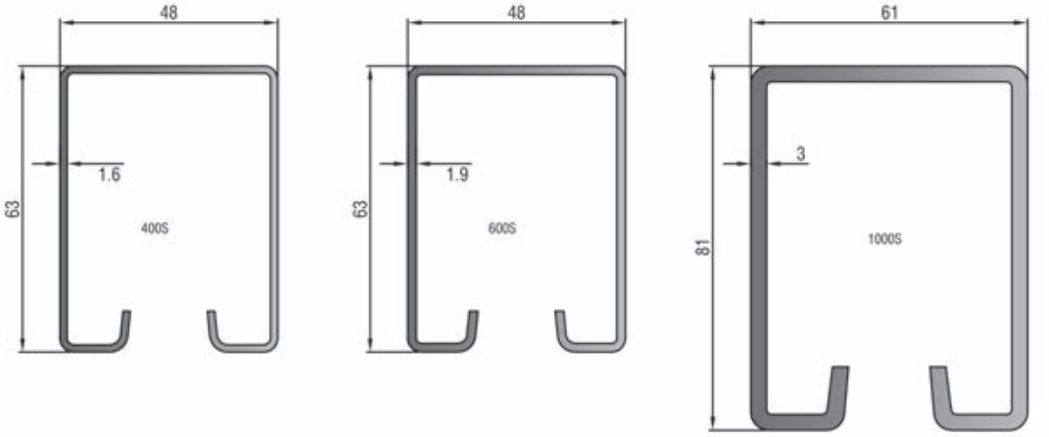

For specialist projects contact:

Hillaldam
SLIDING DOOR SYSTEMS

South Africa: +27 11 626 1001
www.hillaldam.com

Components and Fittings
(Domestic, Commercial, Shop fitting, Hospital, Industrial)

Aluminium Top Tracks

Extruded aluminium profiles – mill finish.

Other finishes include:

- Natural anodised (NA)
- White powder coat (WHT)
- Bronze powder coat (BRZ)
- Black powder coat (BLK)

Other finishes available on request.

100TA TRACK LENGTHS
1.5m; 2.1m; 2.4m; 3m; 3.6m; 6m; 7.2m

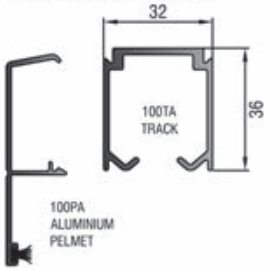

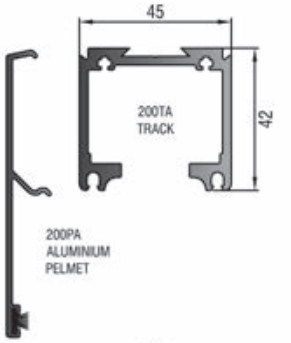

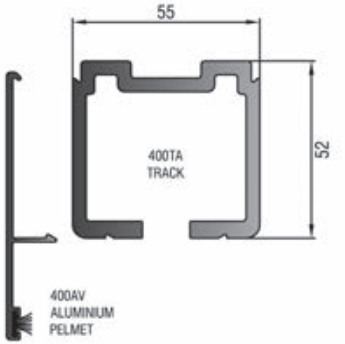

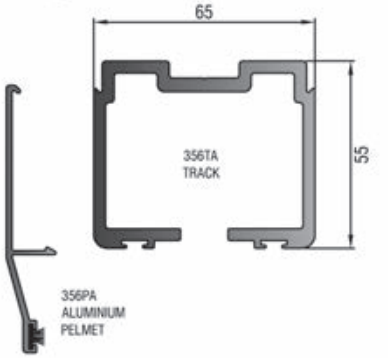

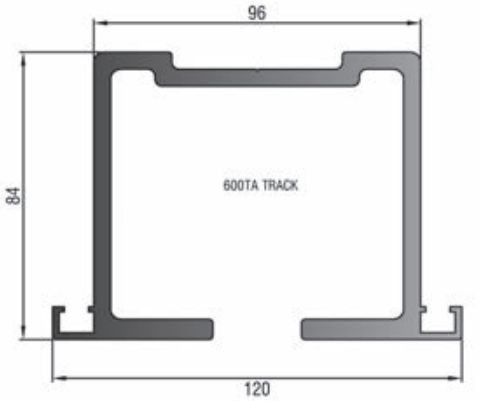

200TA 400TA, 356TA & 600TA TRACK LENGTHS
1.5m; 2m; 2.5m; 3m; 3.5m; 4m; 5m; 6m

For specialist projects contact:

Hillaldam
SLIDING DOOR SYSTEMS

South Africa: +27 11 626 1001
www.hillaldam.com

Bottom Tracks

In aluminium, brass and steel in black, red oxide and electro galvanised.

ALUMINIUM TRACKS - 1.5m; 2.1m; 2.4m; 3m; 3.6m; 6m; 7.2m

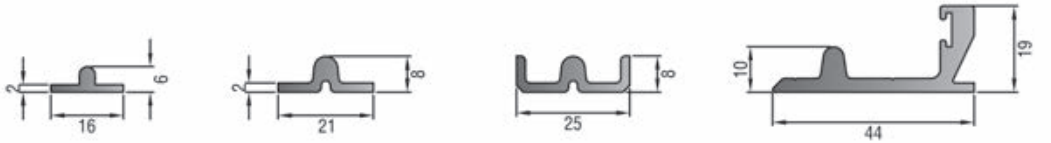

77A 814A 815A 812A

BRASS TRACKS - 1.5m; 2.1m; 2.4m; 3m; 3.6m; 6m; 7.2m

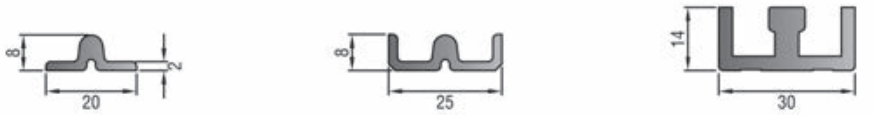

814LB 815LB 821BH

STEEL TRACKS - 1.5m; 2.1m; 2.4m; 3m; 3.6m; 6m; 7.2m

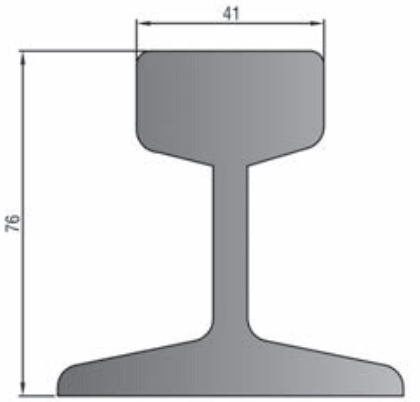

91S

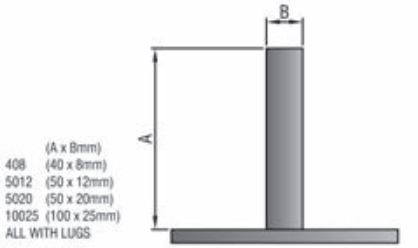

For specialist projects contact:

Hillaldam SLIDING DOOR SYSTEMS

South Africa: +27 11 626 1001
www.hillaldam.com

Components and Fittings
(Domestic, Commercial, Shop fitting, Hospital, Industrial)

Top Guide Channels

In aluminium, brass and steel in black, red oxide and electro galvanised.

ALUMINIUM CHANNELS - 1.5m; 2.1m; 2.4m; 3m; 3.6m; 6m; 7.2m

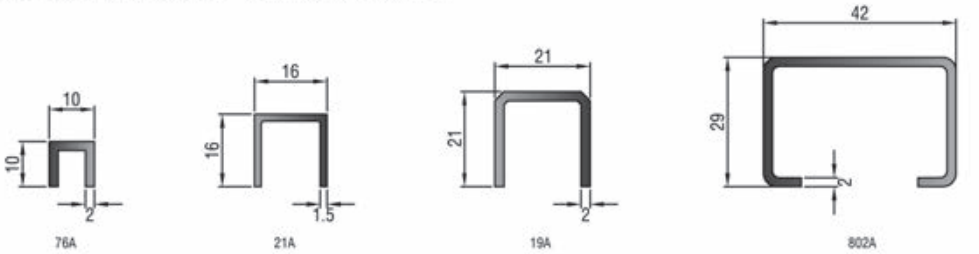

BRASS CHANNELS - 1.5m; 2.1m; 2.4m; 3m; 3.6m; 6m; 7.2m

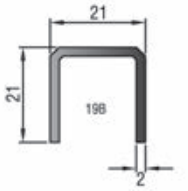

STEEL CHANNELS - 1.5m; 2.1m; 2.4m; 3m; 3.6m; 6m; 7.2m

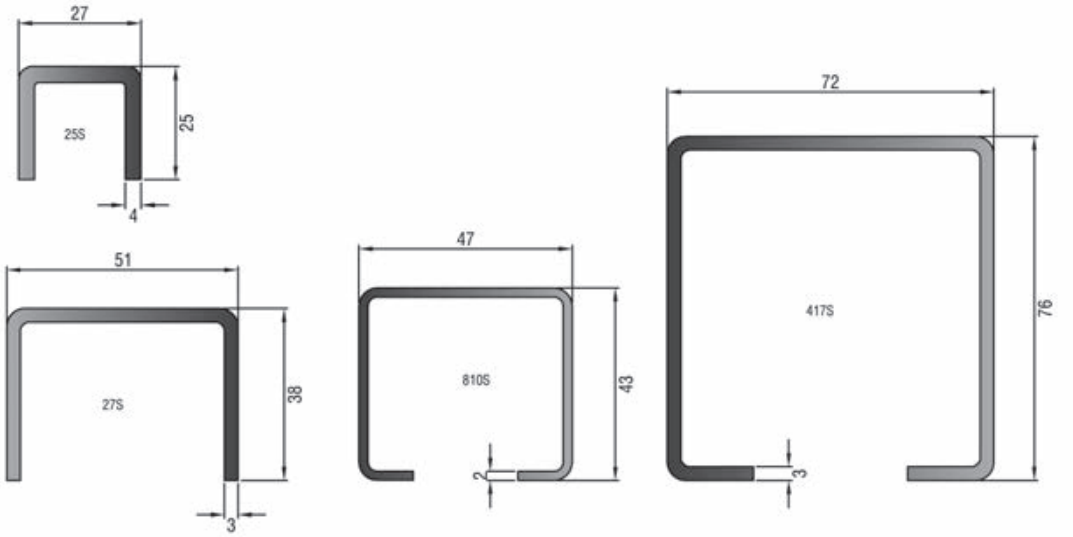

For specialist projects contact:

Hillaldam
SLIDING DOOR SYSTEMS

South Africa: +27 11 626 1001
www.hillaldam.com

Components and Fittings
(Domestic, Commercial, Shop fitting, Hospital, Industrial)

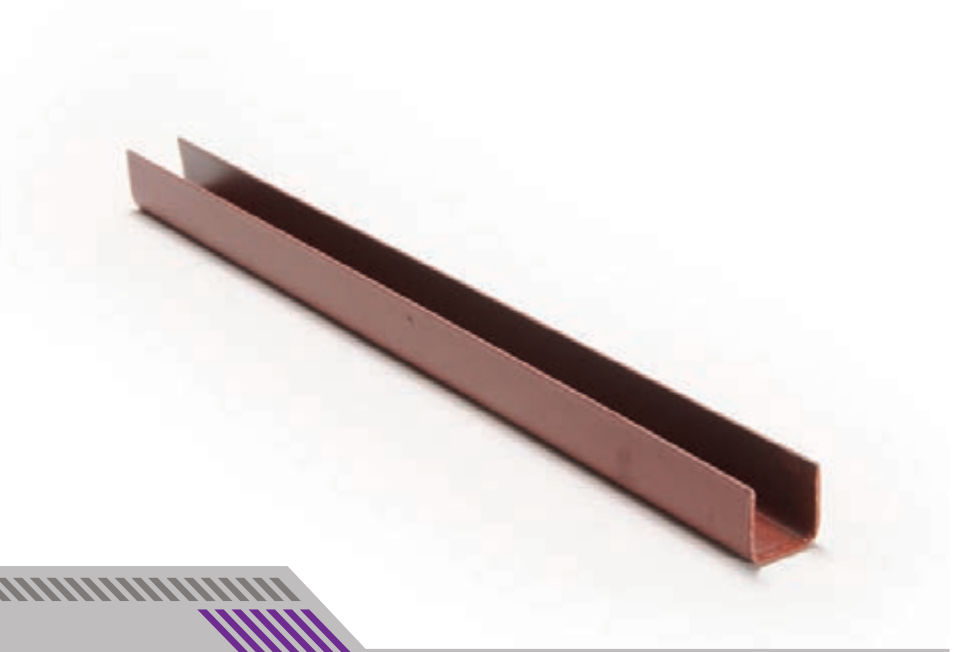

Bottom Guide Channels

In aluminium, brass and steel in black, red oxide and electro galvanised.

ALUMINIUM CHANNELS - 1.5m; 2.1m; 2.4m; 3m; 3.6m; 6m; 7.2m

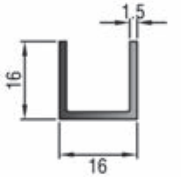

21A

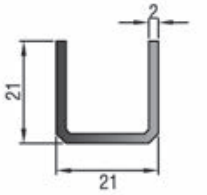

19A

BRASS CHANNELS - 1.5m; 2.1m; 2.4m; 3m; 3.6m; 6m; 7.2m

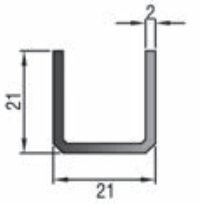

19B

STEEL CHANNELS - 1.5m; 2.1m; 2.4m; 3m; 3.6m; 6m; 7.2m

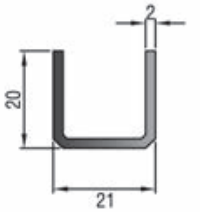

19S

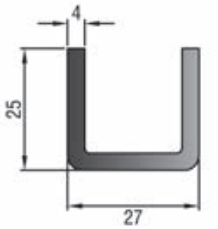

25S

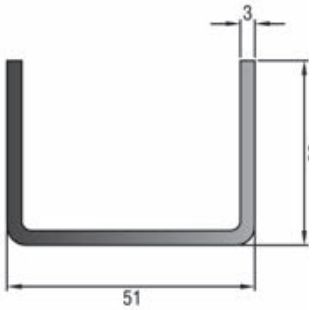

27S

For specialist projects contact:

Hillaldam
SLIDING DOOR SYSTEMS

South Africa: +27 11 626 1001
www.hillaldam.com

Components and Fittings
(Domestic, Commercial, Shop fitting, Hospital, Industrial)

Track and Channel Brackets

In aluminium and steel in black, red oxide and electro galvanised.
A100, A200, A400 Brackets available in stainless steel.

SIDE FIXING BRACKETS

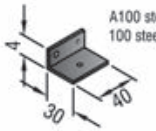

A100 steel bracket for 100 steel track

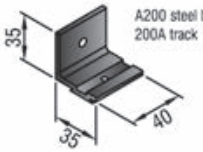

A200 steel bracket for 200A track

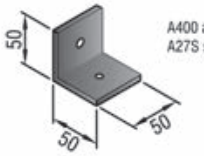

A400 aluminium bracket for 400A aluminium track
A27S steel bracket for 27S steel channel

Steel brackets for 200, 400, 600, 1000 steel track, 802, 810, 417 channels

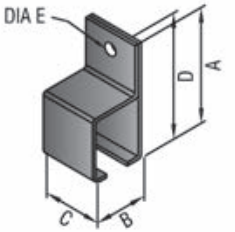

Bracket	For track	A	B	C	D	E
A200	200	92	45	45	76	9
A460	400/600	121	59	80	102	17
A1000	1000	160	72	80	130	17
A802	802	74	53	50	57	10
A810	810	92	55	50	76	10
A417	417	165	86	80	133	21

TOP FIXING BRACKETS

Steel brackets for 200, 400, 600, 1000 steel track, 802, 810, 417 channels

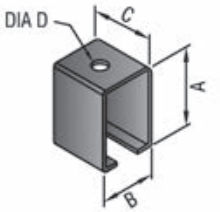

Bracket	For track	A	B	C	D
R200	200	65	45	45	12
R460	400/600	87	58	57	12
R1000	1000	113	73	80	16
R802	802	50	52	50	10
R810	810	62	55	50	10
R417	417	100	86	80	20

200EC and 460EC end clips for closed end A200, R200, A460, R460 brackets

For specialist projects contact:
Hillaldam SLIDING DOOR SYSTEMS
South Africa: +27 11 626 1001
www.hillaldam.com

Top Hangers

Available in mild steel, galvanised and stainless steel for coastal applications.

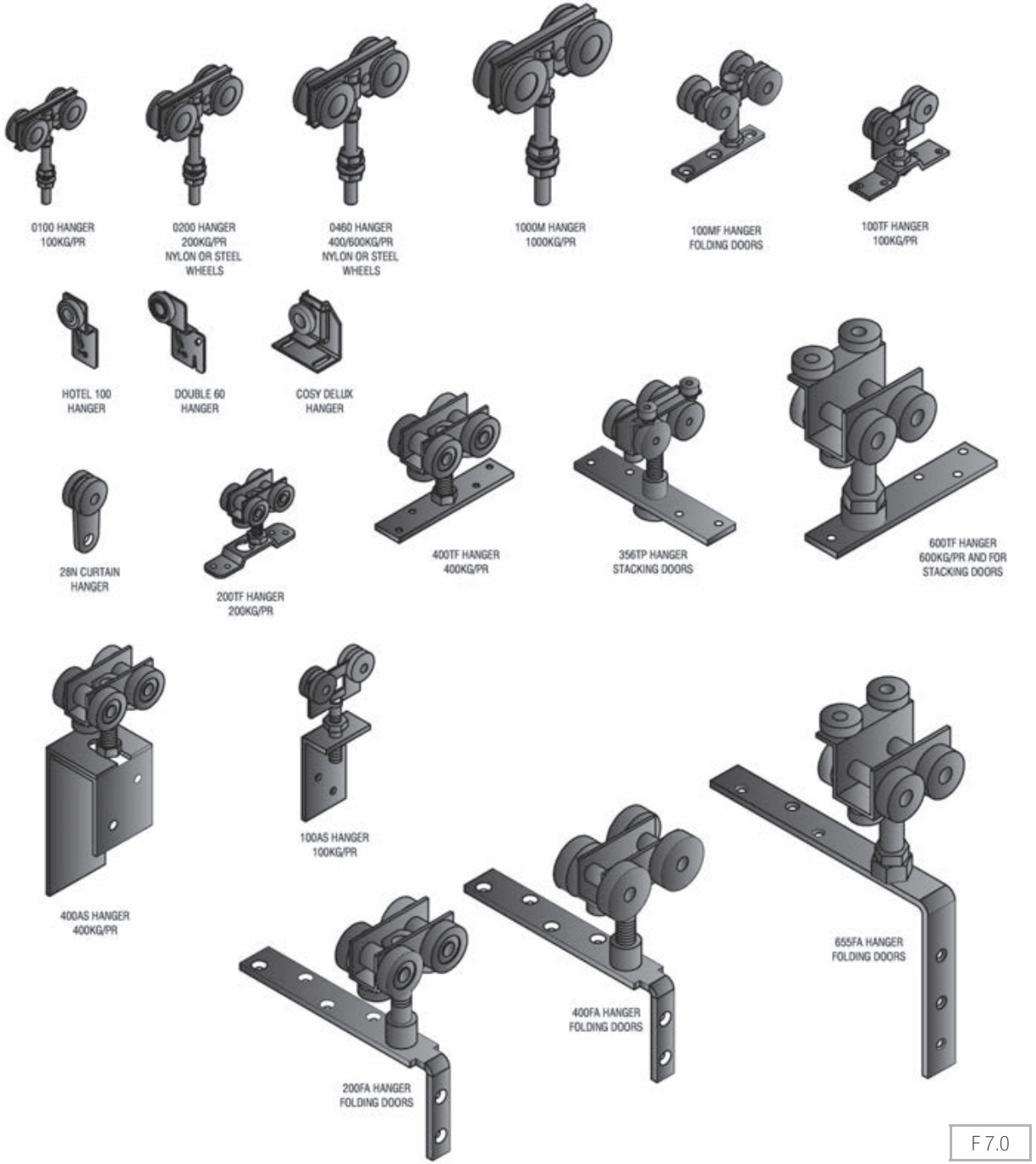

For specialist projects contact:

Hillaldam
SLIDING DOOR SYSTEMS

South Africa: +27 11 626 1001
www.hillaldam.com

Components and Fittings
(Domestic, Commercial, Shop fitting, Hospital, Industrial)

Bottom Rollers

Available in mild steel galvanised, stainless steel and aluminium for coastal applications.

Aluminium roller finishes include:

- Natural Anodised (NA)
- White Powder Coat (WHT)
- Bronze Powder Coat (BRZ)
- Black Powder Coat (BLK)
- Gold Anodised (GA)

Other finishes available on request.

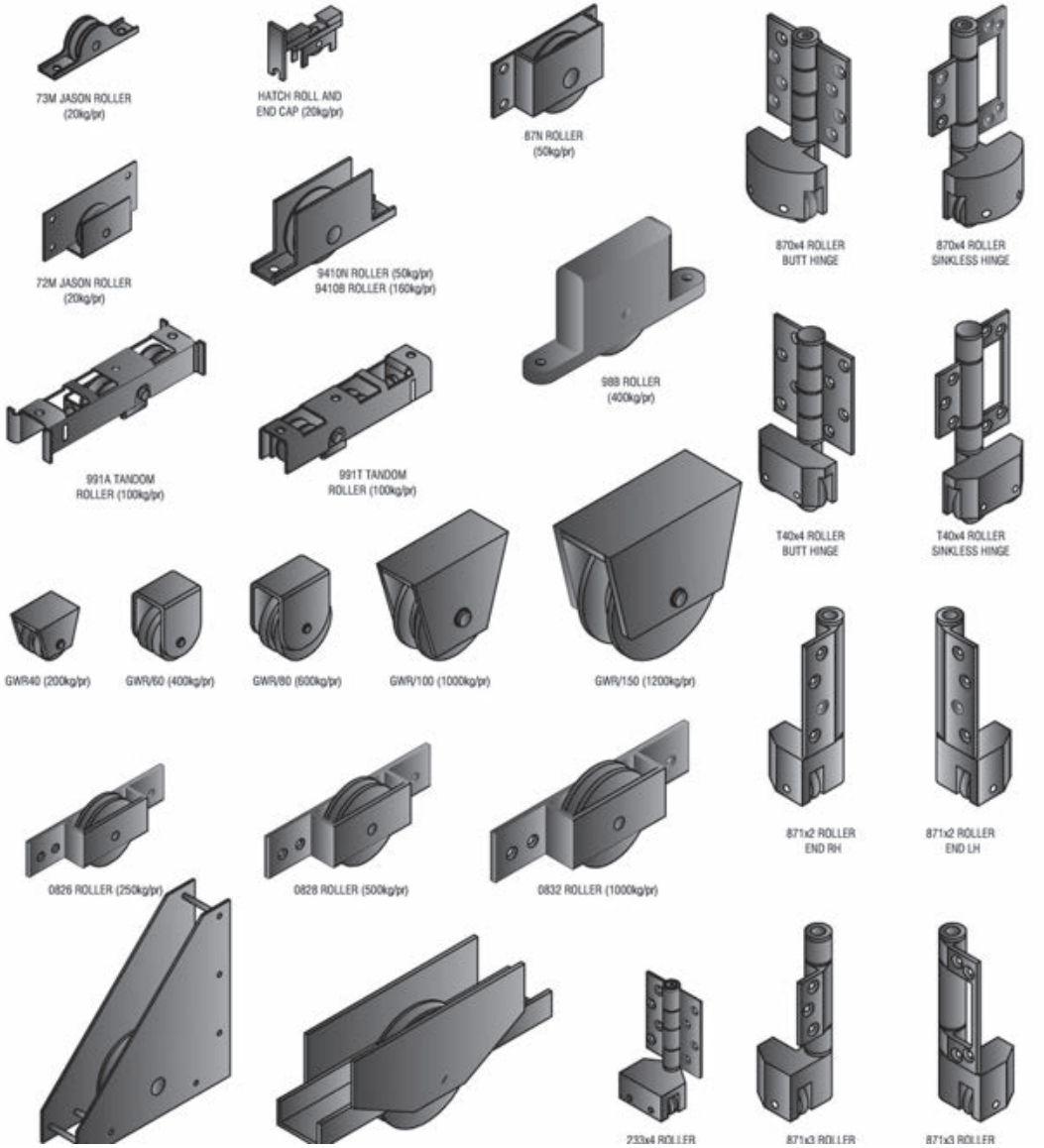

For specialist projects contact:

Hillaldam SLIDING DOOR SYSTEMS

South Africa: +27 11 626 1001
www.hillaldam.com

Guides

Available in mild steel galvanised, stainless steel and aluminium for coastal applications.

Aluminium guide finishes include:

- Natural Anodised (NA)
- White Powder Coat (WHT)
- Bronze Powder Coat (BRZ)
- Black Powder Coat (BLK)
- Gold Anodised (GA)

Other finishes available on request.

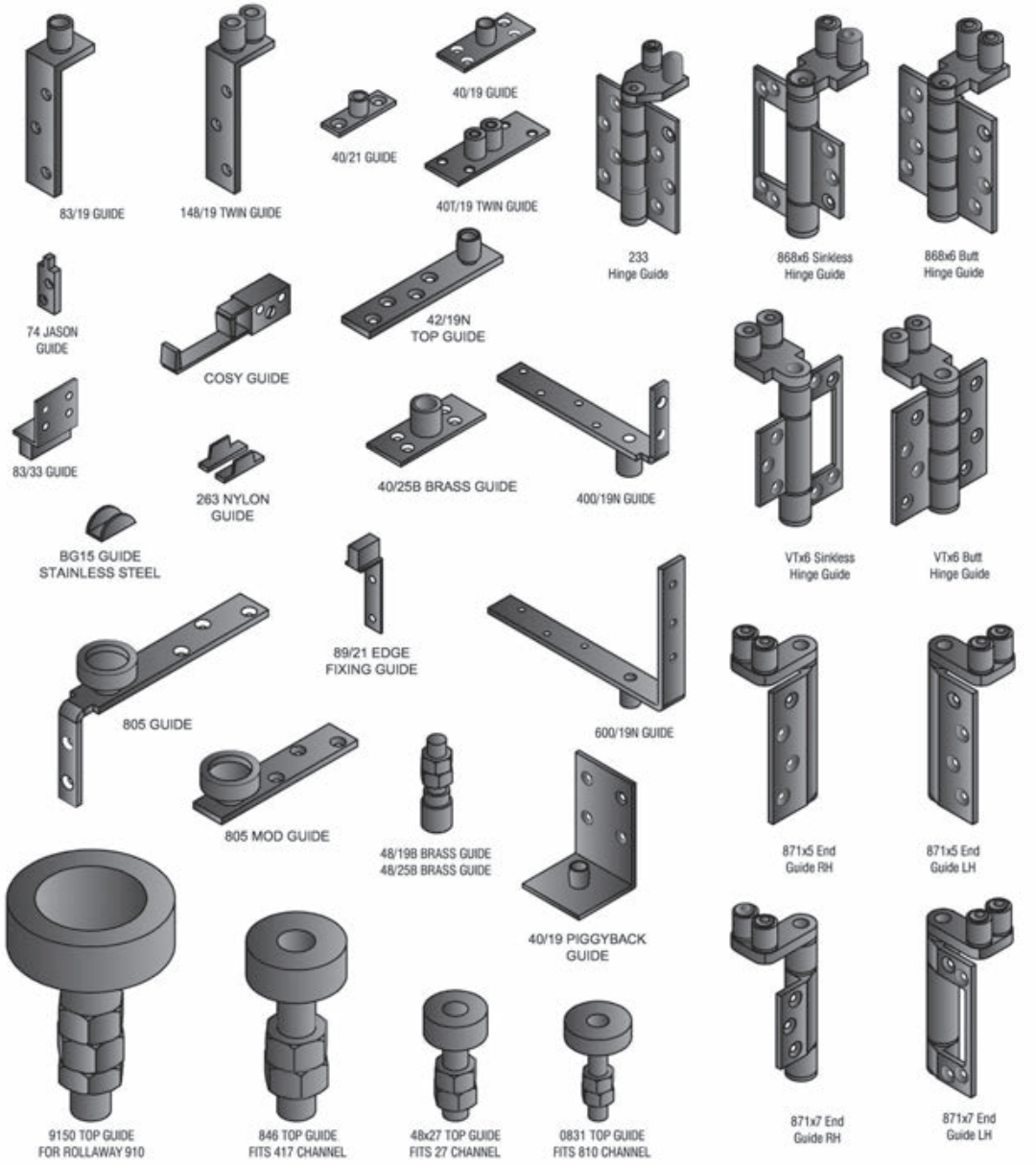

For specialist projects contact:

Hillaldam SLIDING DOOR SYSTEMS

South Africa: +27 11 626 1001
www.hillaldam.com

Handles

265 P finger pull – plastic
265G finger pull – chromed plastic
502 flush handle – natural or gold anodised aluminium

265P FINGER PULL - Plastic

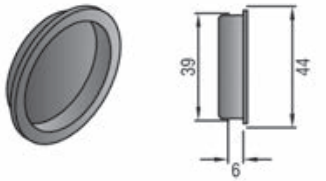

H208 FINGER PULL - Chromed plastic
(22mm DIA HOLE IN GLASS)

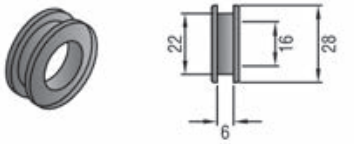

96TP HANDLE - Plastic

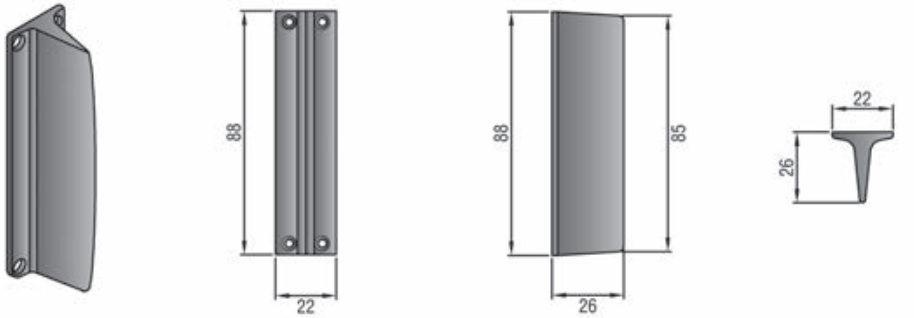

502 FLUSH HANDLE - Aluminium (natural, gold anodised)

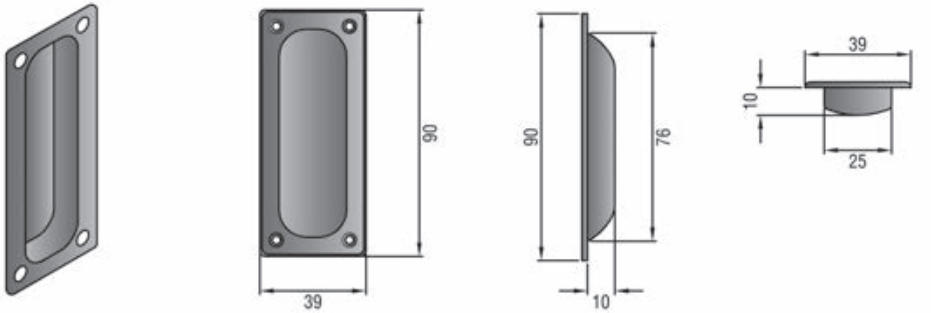

For specialist projects contact:
Hillaldam
SLIDING DOOR SYSTEMS
South Africa: +27 11 626 1001
www.hillaldam.com

Handles

503 flush handle – natural, gold or bronze anodised aluminium
503SL flush handle – natural, gold or bronze anodised aluminium

503 FLUSH HANDLE - Aluminium (natural, gold, bronze anodised)

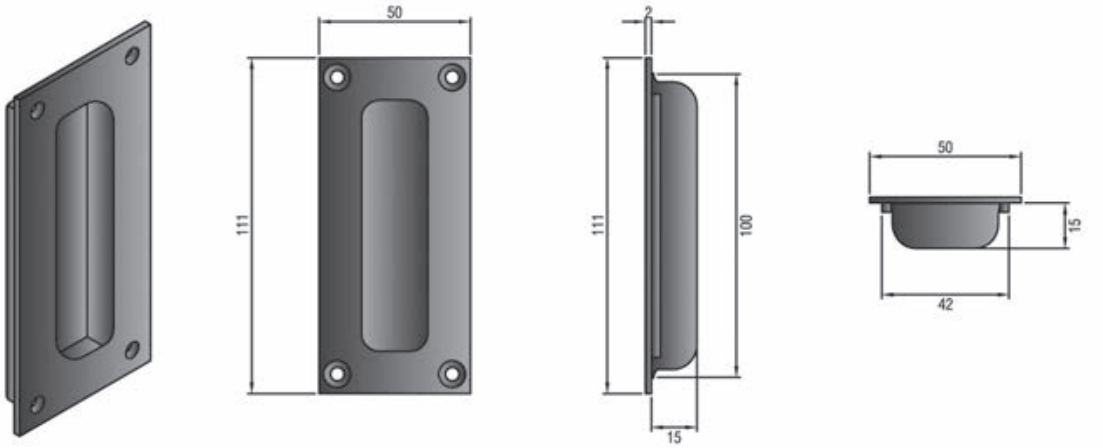

503SL FLUSH HANDLE - Aluminium (natural, gold, bronze anodised)

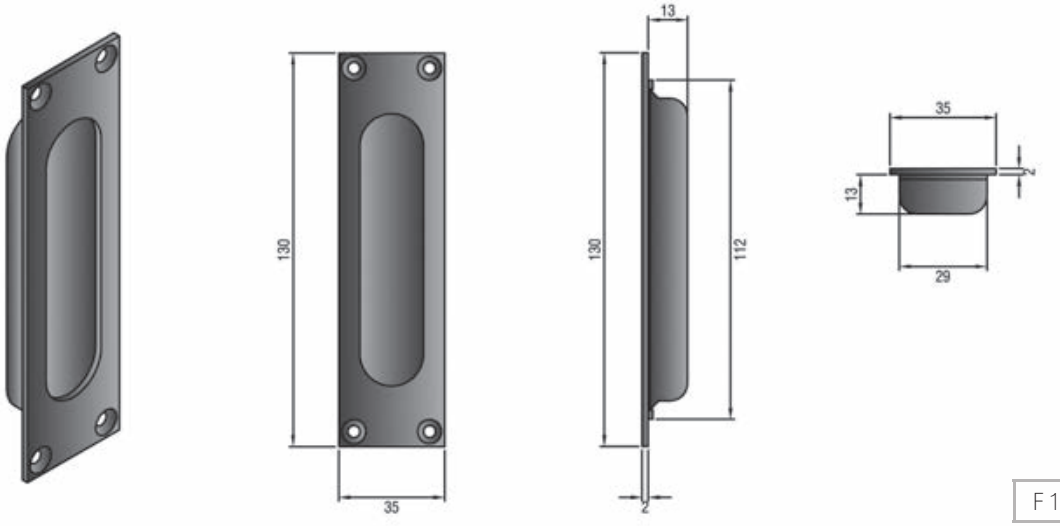

For specialist projects contact:

Hillaldam
SLIDING DOOR SYSTEMS

South Africa: +27 11 626 1001
www.hillaldam.com

Components and Fittings
(Domestic, Commercial, Shop fitting, Hospital, Industrial)

Handles

Aluminium hinge handle finishes include:

- Natural Anodised (NA)
- White Powder Coat (WHT)
- Bronze Powder Coat (BRZ)
- Black Powder Coat (BLK)
- Gold Anodised (GA)

Other finishes available on request.

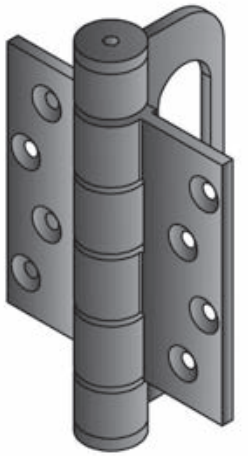

VISTA BH BUTT
HINGE HANDLE

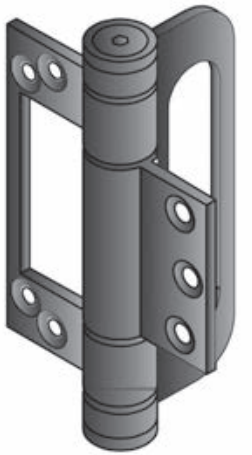

VISTA SKH SINKLESS
HINGE HANDLE

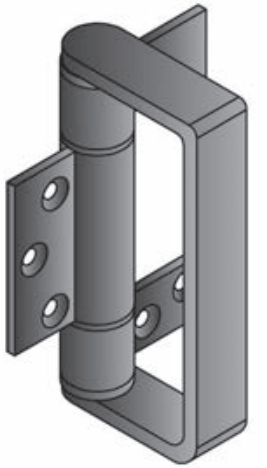

86 SKH SINKLESS
HINGE HANDLE

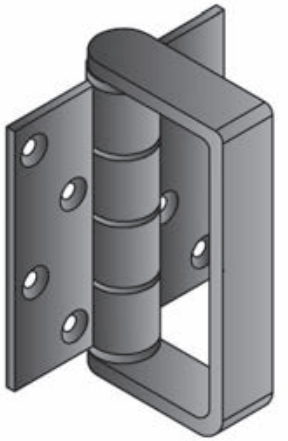

86 BH BUTT
HINGE HANDLE

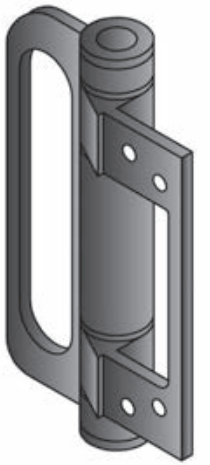

871 SKH SINKLESS
HINGE HANDLE

CFH65 FLUSH PULL HANDLE
(25mm DIA HOLE IN GLASS)

For specialist projects contact:

Hillaldam
SLIDING DOOR SYSTEMS

South Africa: +27 11 626 1001
www.hillaldam.com

Handles

2545C Handle (natural anodised)
561 Bow handle (natural anodised)

254SL HANDLE - Aluminium (natural anodised)

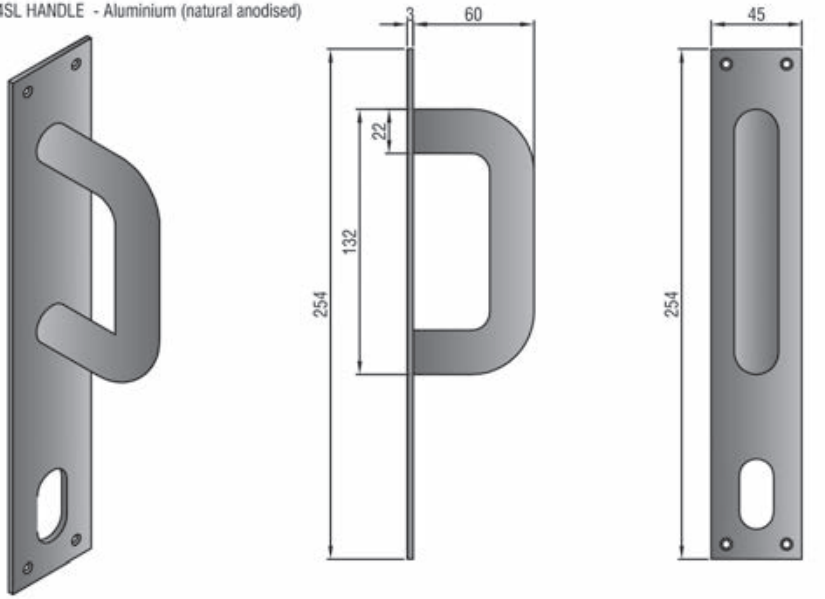

561 BOW HANDLES - Aluminium

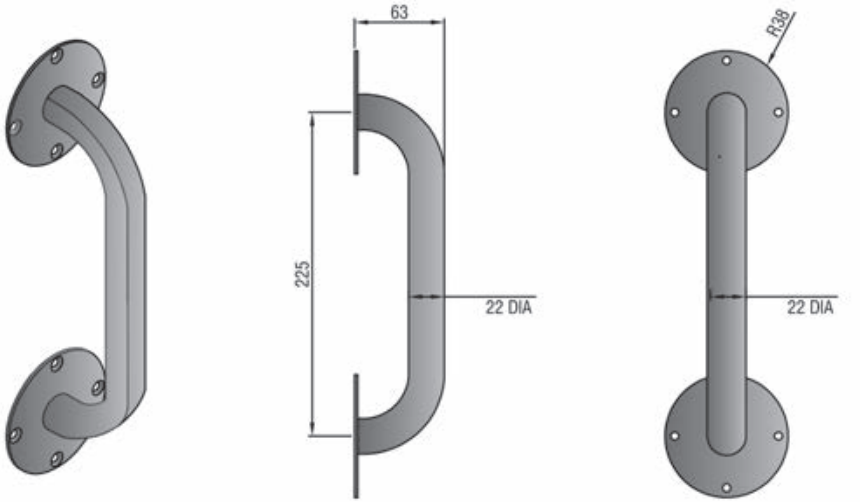

For specialist projects contact:
Hillaldam
SLIDING DOOR SYSTEMS

South Africa: +27 11 626 1001
www.hillaldam.com

Components and Fittings
(Domestic, Commercial, Shop fitting, Hospital, Industrial)

Flush Bolts and Keeps

488x150 Flush bolt – aluminuim (natural, gold or black).
488x150 Cranked flush bolt – aluminuim (natural, gold or black).

Other finishes available on request.

488x150 CRANKED FLUSH BOLT 5 or 10mm - Aluminium (natural, gold, black) - Available in 150mm, 400mm 600mm and 900mm lengths

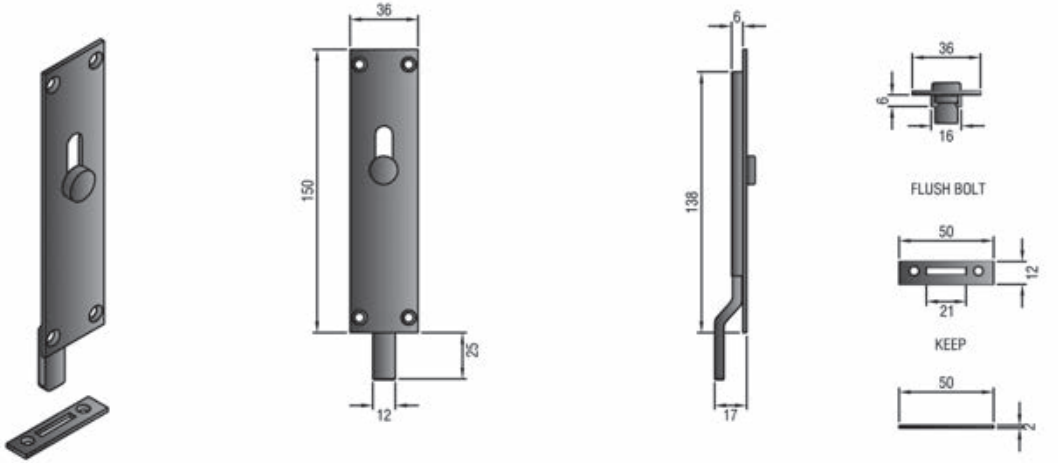

488x150 FLUSH BOLT - Polished brass or aluminium (natural, gold, black) - Available in 150mm, 400mm 600mm and 900mm lengths

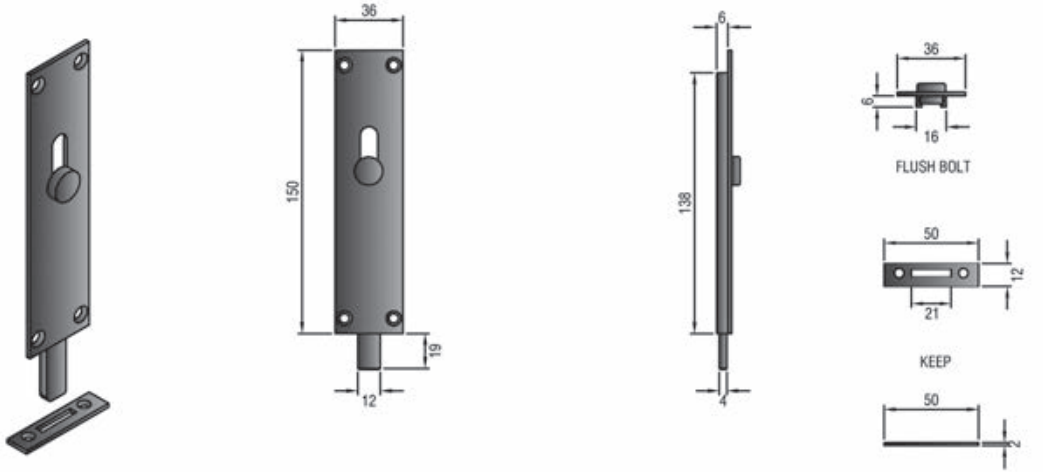

For specialist projects contact:
Hillaldam SLIDING DOOR SYSTEMS
South Africa: +27 11 626 1001
www.hillaldam.com

Flush Bolts and Keeps

477 Flush bolt – for aluminium framed, top hung doors
477L Flush bolt and 9139 sprung keep are ideal for top hung sliding stacking doors. The 32mm throw provides secure locking even when the floor levels are uneven.

Features

- Non-corrosive body and shoot
- 15mm throw on bolt shoot
- Easy reach operation
- Edge or face fixing
- Positive locking when shot
- Natural anodised / black or white PC
- Sprung keep with oval hole
- Stainless steel keep amd plate

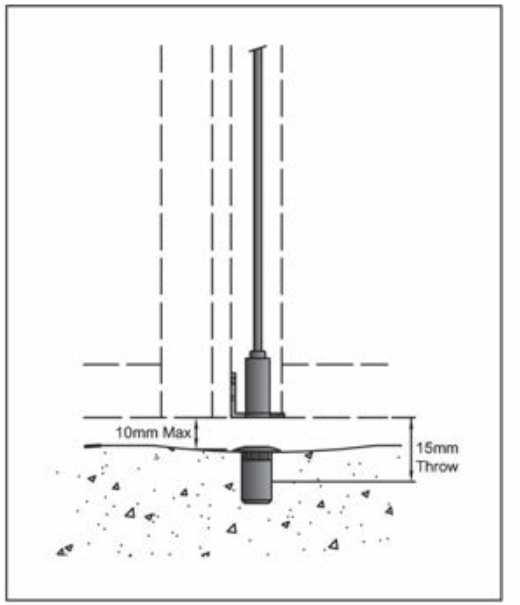

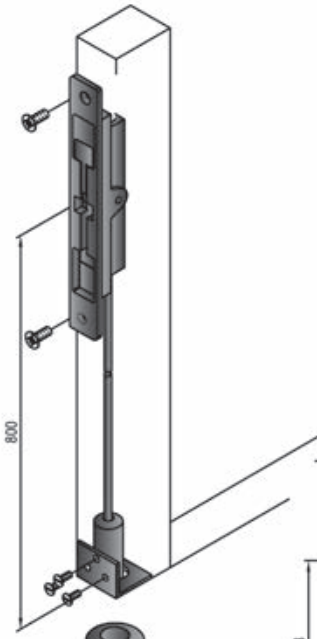

477L WITH FOLLOWER

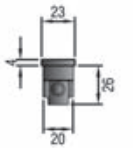

477L FLUSH BOLT

CUTOUT IN DOOR STILE FOR 477 FLUSH BOLT BODY

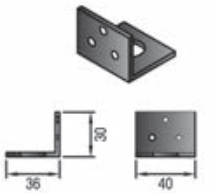

477LR FOLLOWER

BOTTOM ROUND SHOOT LOCATES INTO 9139 SPRING SOCKET

9139 SPRING KEEP

For specialist projects contact:

Hillaldam
SLIDING DOOR SYSTEMS

South Africa: +27 11 626 1001
www.hillaldam.com

Components and Fittings
(Domestic, Commercial, Shop fitting, Hospital, Industrial)

Flush Bolts and Keeps

477LF and 477LR flush bolts – for aluminium framed folding doors.

Features

- Non-corrosive body, shoot and keep
- Easy reach operation
- 15mm throw on bolt shoot
- Natural anodised / black or white powder coated.

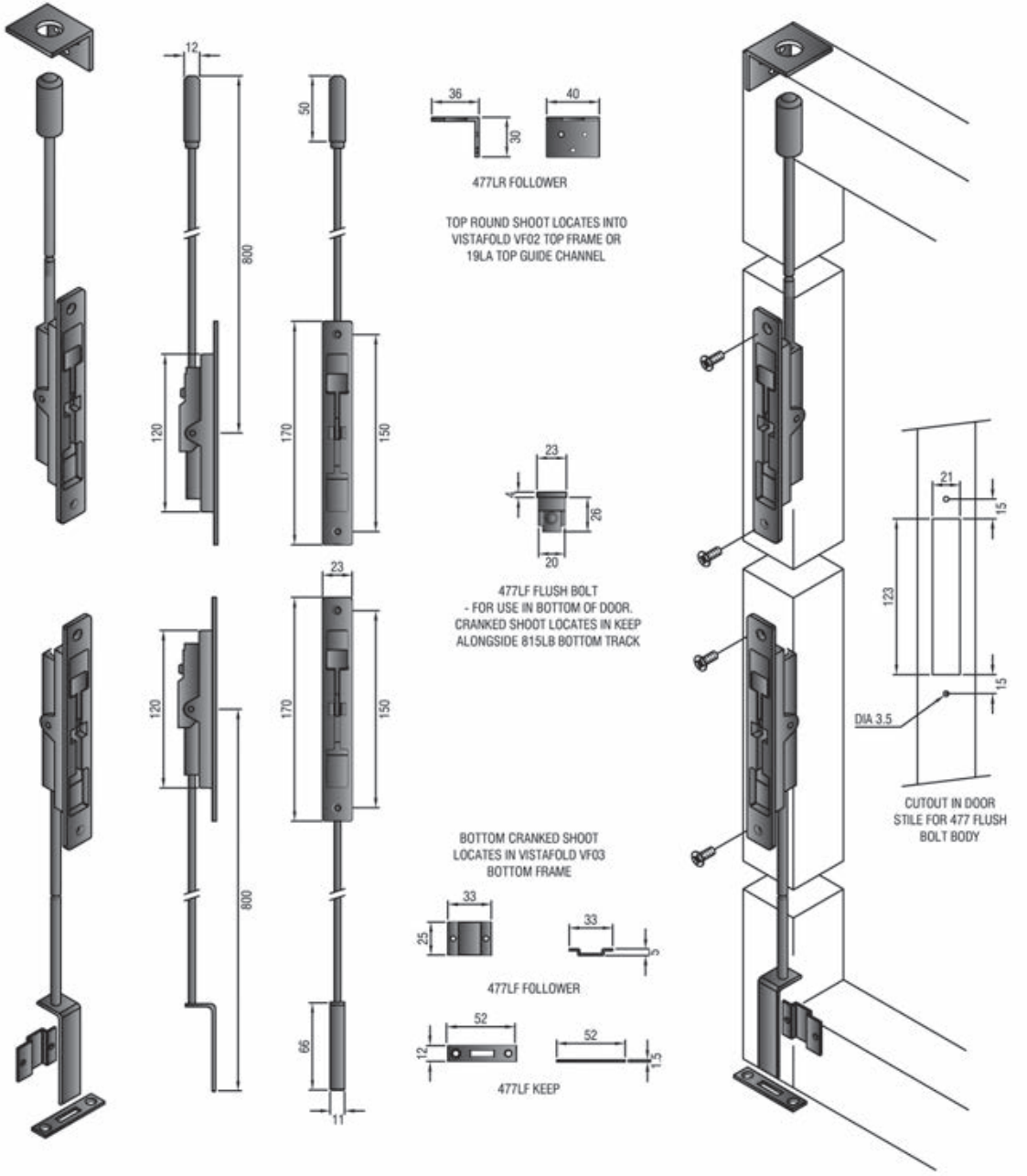

For specialist projects contact:

Hillaldam
SLIDING DOOR SYSTEMS

South Africa: +27 11 626 1001
www.hillaldam.com

Flush Bolts and Keeps

477 Espagnolette flush bolt – for aluminium framed folding doors.

Features

- Espagnolette bolt – shoots top and bottom
- Easy reach operation
- 15mm throw on shoots
- Black powder coated body
- Non-corrosive shoots and keeps

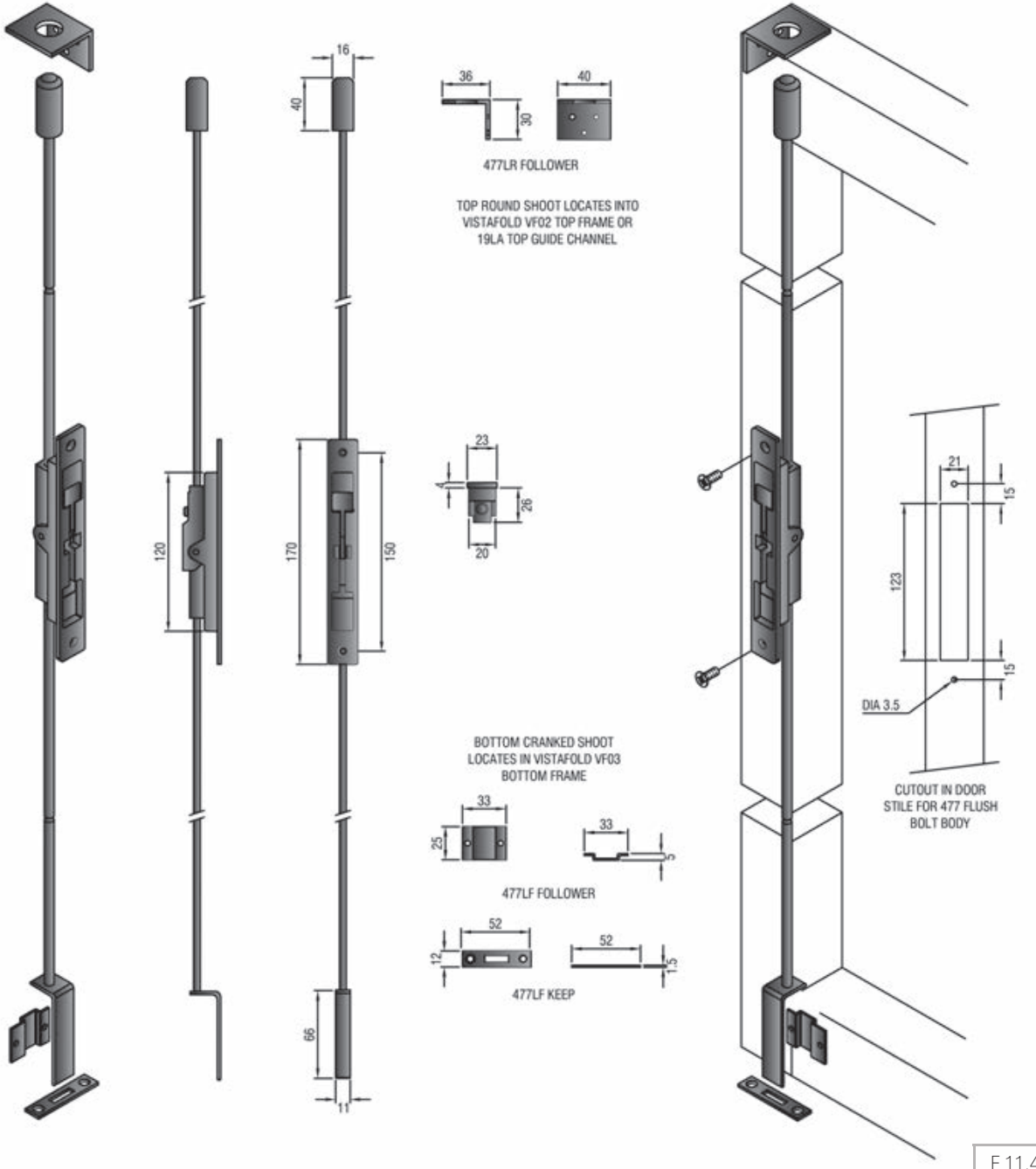

For specialist projects contact:

Hillaldam
SLIDING DOOR SYSTEMS

South Africa: +27 11 626 1001
www.hillaldam.com

Components and Fittings
(Domestic, Commercial, Shop fitting, Hospital, Industrial)

Flush Bolts and Keeps

1S Drop bolt for steel and timber doors.

Features

- Secure double bracket fastening
- Non-corrosive galvanised body
- Lockable
- Face fixing
- Perfect for industrial applications

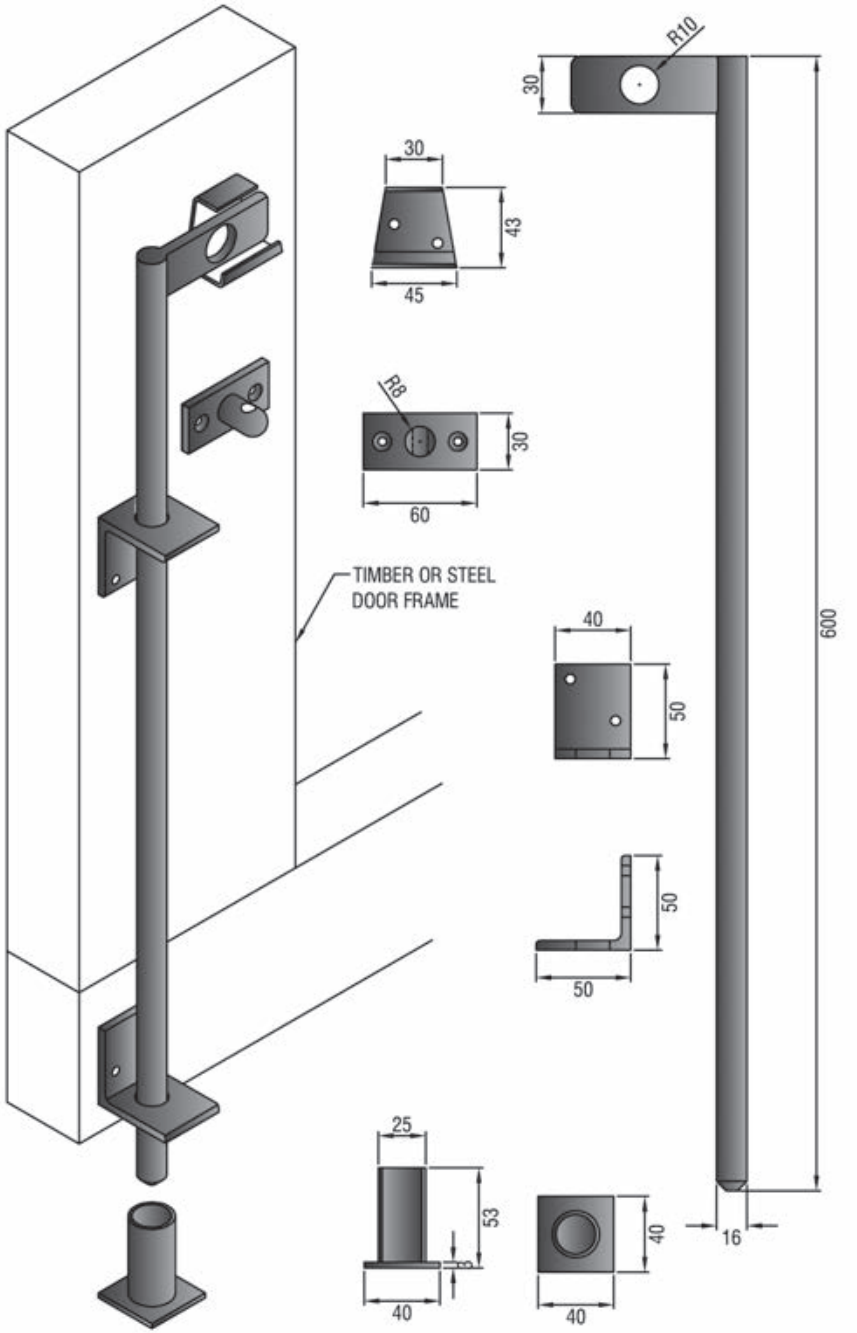

For specialist projects contact:
Hillaldam
SLIDING DOOR SYSTEMS
South Africa: +27 11 626 1001
www.hillaldam.com

Door Stops

208
Use in domestic applications. Door or wall mounted. (Double 60 & Jason)

DS2
Use in domestic or commercial applications. Floor mounted.

100ES
Track stop for use with 100TA Track.

2/400ES
Track stop for use with 200TA and 400TA Track.

46L
Light duty industrial door stop. Wall mounted.

46
Light/medium duty industrial door stop. Floor mounted.

For specialist projects contact:

Hillaldam
SLIDING DOOR SYSTEMS

South Africa: +27 11 626 1001
www.hillaldam.com

Components and Fittings
(Domestic, Commercial, Shop fitting, Hospital, Industrial)

208 - Use in domestic applications. Door or wall mounted. (Double 60, Jason)

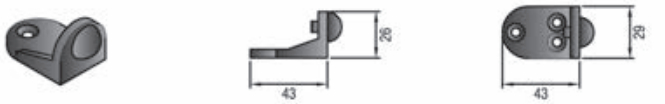

DS2 - Use in domestic or commercial applications. Floor mounted.

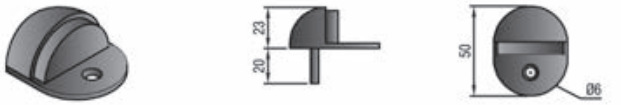

101 - Track stop to suit 100A & 100S track.

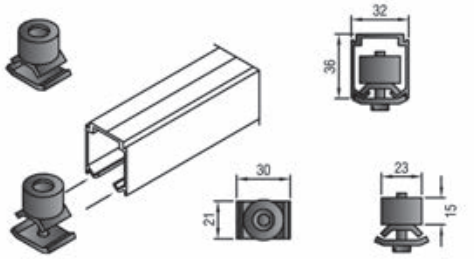

2/400EC - Track stop to suit 200A & 400A track.

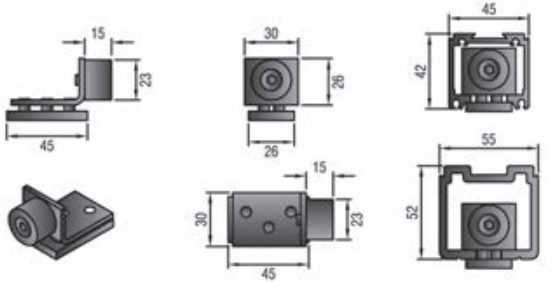

46L - Light duty industrial door stop. Wall mounted.

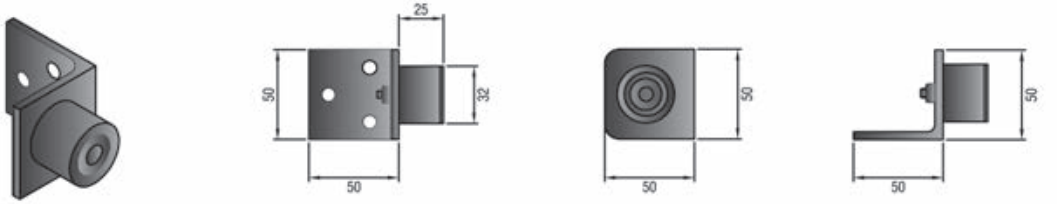

46 - Light/medium duty industrial door stop. Floor mounted.

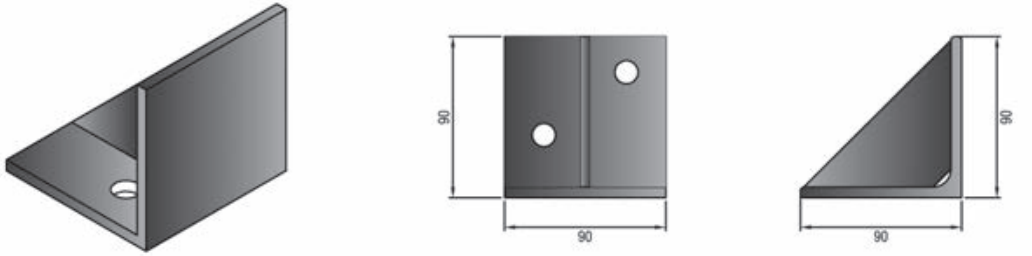

Door Stops

44x1
Medium duty industrial door stop.
Wall mounted.

49
Heavy duty industrial door stop.
Floor mounted.

44 x 1 - Medium duty industrial door stop. Wall mounted.

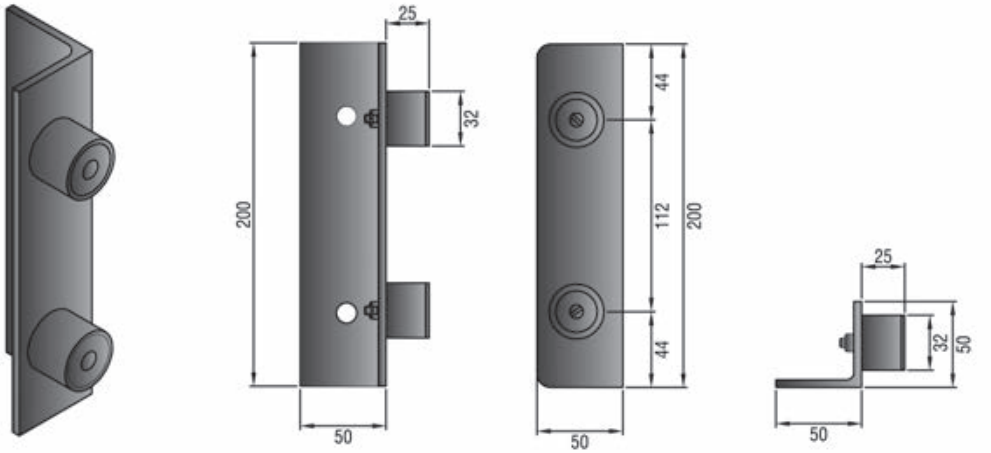

49 - Heavy Duty industrial door stop. Floor Mounted.

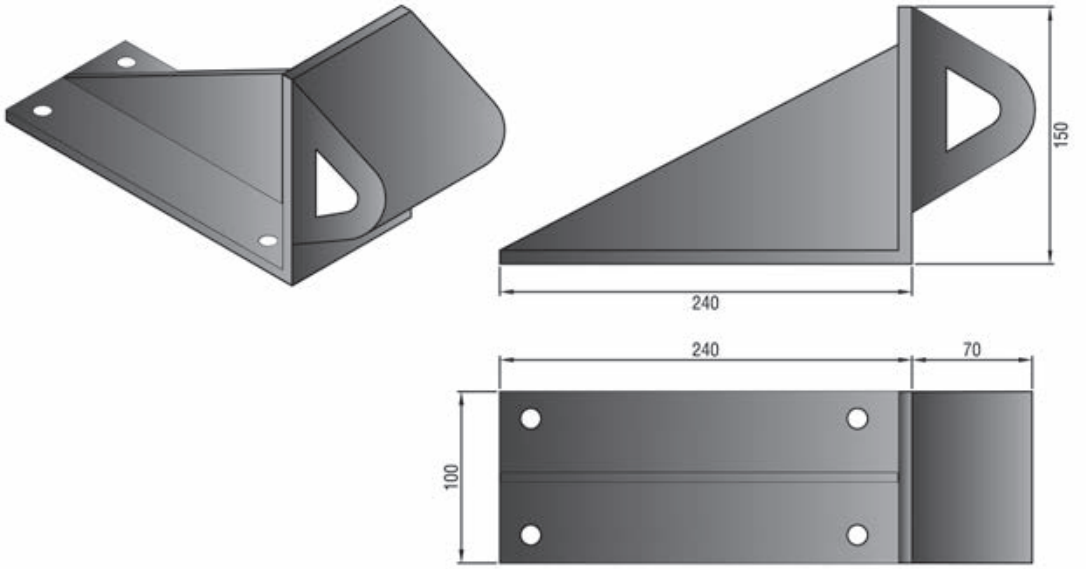

For specialist projects contact:
Hillaldam
SLIDING DOOR SYSTEMS
South Africa: +27 11 626 1001
www.hillaldam.com

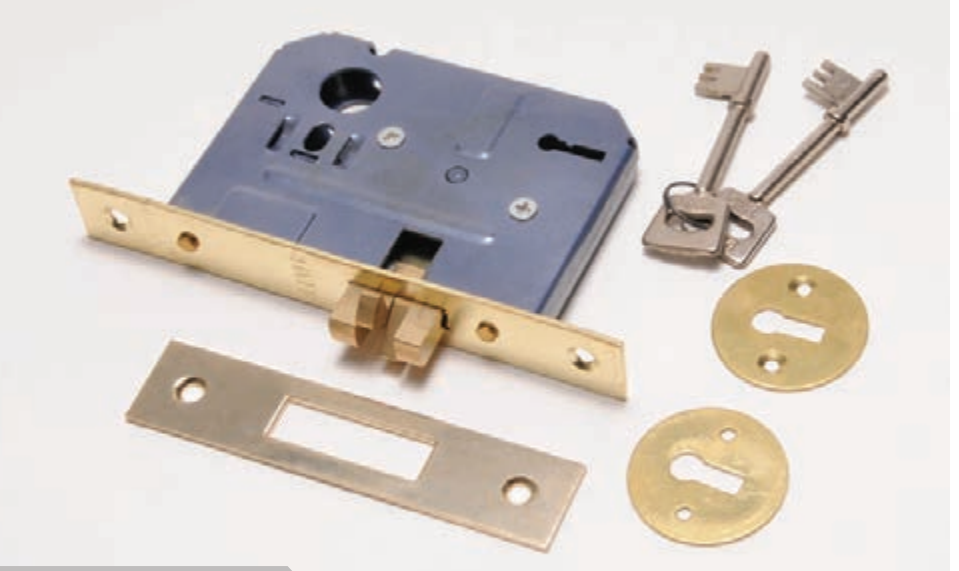

Locking

EB1 Holdback catch – black plastic
452 Holdback catch – brass or chromed
455 Roller catch and striker – brass or chromed
Hatch lock – black or chrome
970 Dead lock (timber door)
965 Claw lock (timber door)

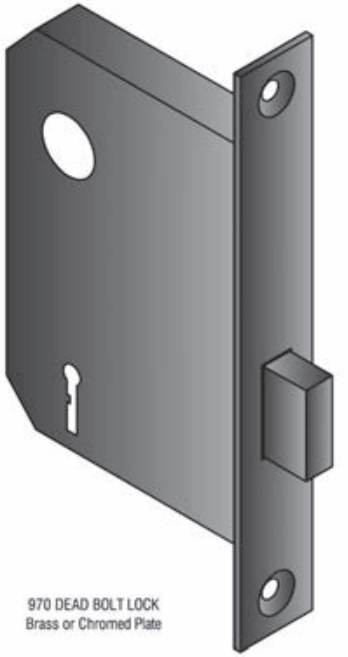

970 DEAD BOLT LOCK
Brass or Chromed Plate

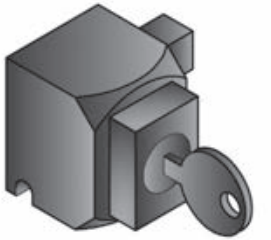

HATCH LOCK
(HANDED)

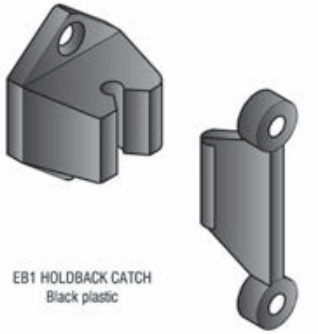

EB1 HOLDBACK CATCH
Black plastic

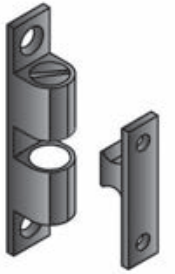

452 HOLDBACK CATCH
Brass or chromed

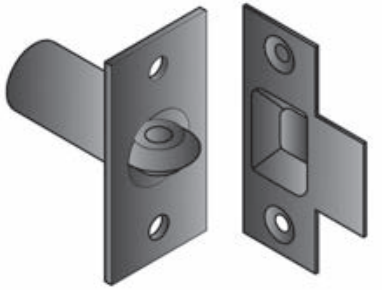

455 ROLLER CATCH AND STRIKER
Brass or chromed

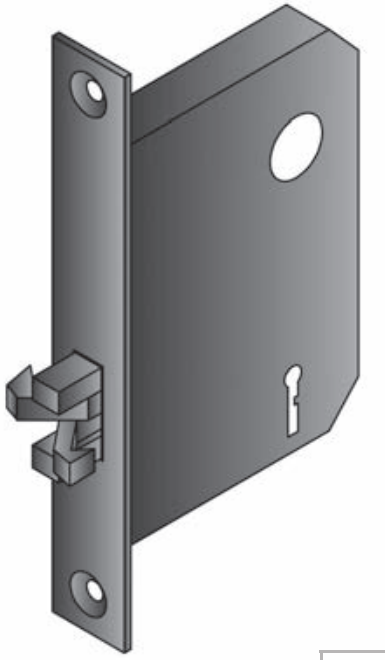

965 CLAW LOCK
Brass or Chromed Plate

F 13.0

For specialist projects contact:

Hillaldam
SLIDING DOOR SYSTEMS

South Africa: +27 11 626 1001
www.hillaldam.com

Components and Fittings
(Domestic, Commercial, Shop fitting, Hospital, Industrial)

Weather Seals

122 Brush welt – aluminium carrier with polypropylene brush (black, bronze & white)
TEG Timber door seal
868B Bubble seal 6,7mm
WP Wool pile 6,7mm

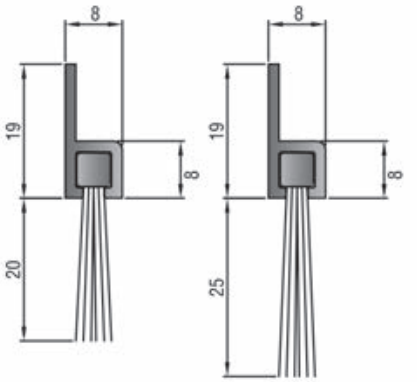

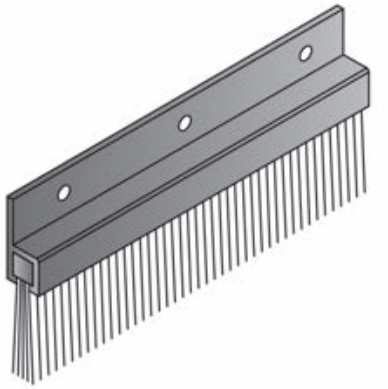

122 BRUSH WELT
- ALUMINUM CARRIER WITH POLYPROPYLENE BRUSH

TEG TIMBER SEAL

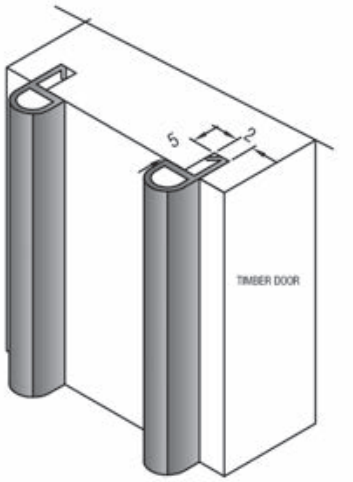

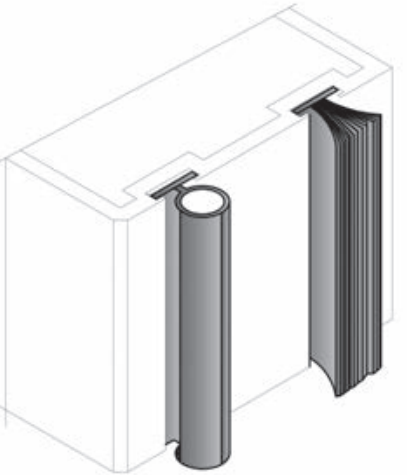

868B BUBBLE SEAL
ALUMINIUM DOORS
6.7mm BASE

WP WOOL PILE
ALUMINIUM DOORS
6.7mm BASE

For specialist projects contact:
Hillaldam
SLIDING DOOR SYSTEMS
South Africa: +27 11 626 1001
www.hillaldam.com